REME

Leadership quality for furniture

Table of Contents

Single Extension PERFECT ____ Page 08
Self-close ____ Page 10
Soft-close ____ Page 16
Push-to-Open ____ Page 24
Push-to-Open synchronization ____ Page 28
Offset hanging tab ____ Page 32

Single Extension PERFECT PEANUT® ____ Page 36
Soft-close ____ Page 38
Push-to-Open ____ Page 42

Single Extension PERFECT EB23 ____ Page 44
Soft-close ____ Page 46
Push-to-Open ____ Page 52
Peanut® ____ Page 56

Full Extension EXTREME ____ Page 58
Self-close ____ Page 60
Soft-close ____ Page 66
Push-to-Open ____ Page 72
Push-to-Open synchronization ____ Page 76

Full Extension EXTREME PEANUT® ____ Page 80
Soft-close ____ Page 82
Push-to-Open ____ Page 86

Ball bearing runners ____ Page 88
17mm groove ____ Page 90
27mm groove ____ Page 94
37mm groove ____ Page 98

Assembly instructions ____ Page 102
Hole patterns and Drawer width ____ Page 104
Lift Lock ____ Page 106
PEANUT® ____ Page 112

Alignment fitting ____ Page 114

Connection fittings ____ Page 126

Frame runner system ____ Page 132
Bottom thickness up to 14 mm, back panel continuous ____ Page 134
Bottom thickness up to 14-18 mm, bottom continuous ____ Page 140

Hinge cup ____ Page 146

Packaging ____ Page 152





REME Möbelbeschläge GmbH

For more than 30 years REME has been the competent partner for drawer runners Made in Germany. As a medium-sized family business based in Hövelhof – embedded in the industrially strong region of East Westphalia – we develop and manufacture drawer runners for the furniture industry at four plants.
We offer our customers a broad drawer portfolio – from standard runners to premium drawer slides, which we manufacture on self-designed state-of-the-art production lines.

Find out about our products now!

Company

As a 3rd generation family business, acting responsibly is an integral part of our corporate culture. We take responsibility for our employees, for the quality of our products and for the impact of our business activities on society and the environment – with the aim of shaping a better future.

Quality assurance

To ensure that machines and equipment in our plants meet our high-quality standards, we develop many of them by ourselves. With uniform inspection specifications and automated inspection stations, we manufacture large quantities in consistently high quality. We use a wide range of measuring equipment for our quality control – from simple callipers to state-of-the-art 3D measuring arms. Because we know how tough everyday furniture can be, we continuously simulate rigorous endurance and stress tests on our slides in our own test lab.

Energy Management

The DIN EN ISO 50001 certification confirms that REME meets all the requirements of this standard and constantly controls and optimizes energy consumption. On the one hand, the improvements reduce energy consumption and production costs, on the other hand, they lead to lower CO2 emissions and thus reduce global climate change. With this certification, we commit ourselves to the continuous optimization of energy requirements and the resource-conserving use of non-renewable energy sources both in the production plants and in administration. Through this commitment, we assume responsibility for future generations as well as for environmental and climate protection.

Sustainability

For REME, sustainability is the core prerequisite for long-term economic success. It creates the conditions for our company to increase its acceptance in society and to secure its future – and thus also the jobs of its employees – in the long term. Sustainable management therefore requires a balance between several aspects: Environmental protection, occupational safety, energy management, product innovation, quality assurance, employee care, customer care, plant maintenance, etc.

Last but not least, our employees play an important role in our economic success, which is why, especially as a family-owned company, we strive to create framework conditions for our employees that help them to balance their professional and private needs as well as possible. With our company health management, we strive to maintain the satisfaction of our employees. Our company suggestion scheme and improvement management promote new ideas and provide incentives for the internal optimization of processes.

Icons

To give you a quick overview of what our products can do, we have developed icons that symbolise important features and functions.


Single Extension


Full Extension



Loading capacity up to 30 kg



Loading capacity up to 25 kg



Loading capacity up to 15 kg



Loading capacity up to 10 kg


Push-to-Open


Soft-close


Self-close



Installation width 23 mm


Peanut® connection technology



Frame heigth 80 mm



Frame heigth 120 mm



Frame heigth 150 mm

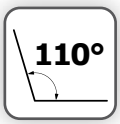

110° Opening angel

Single Extension PERFECT



Single Extension PERFECT

Self-close _____ Page 10
Soft-close _____ Page 16
Push-to-Open _____ Page 24
Push-to-Open Synchronization _____ Page 28
Offset hanging tab _____ Page 32

Product

The star-shaped geometry of the PERFECT single extension runner skillfully absorbs incorrect loads. The overlapping of the star-shaped area ensures high rigidity, which also has a positive effect on the running properties. PERFECT therefore meets all functional requirements for wooden drawers in living and sleeping areas. The PERFECT single extension is available either as a fully-fledged standard version or as a shortened stub version.

Variants

The PERFECT single extension is available with self-close, with soft-close and with push-to-open. The following options are available for attaching and detaching drawers: Plug-on assembly, 1D coupling and 2D coupling. The PERFECT single extension runner offers two anti-lift systems for drawer locking.

Single Extension PERFECT
Self-close and plug-on assembly

Installation Dimensions

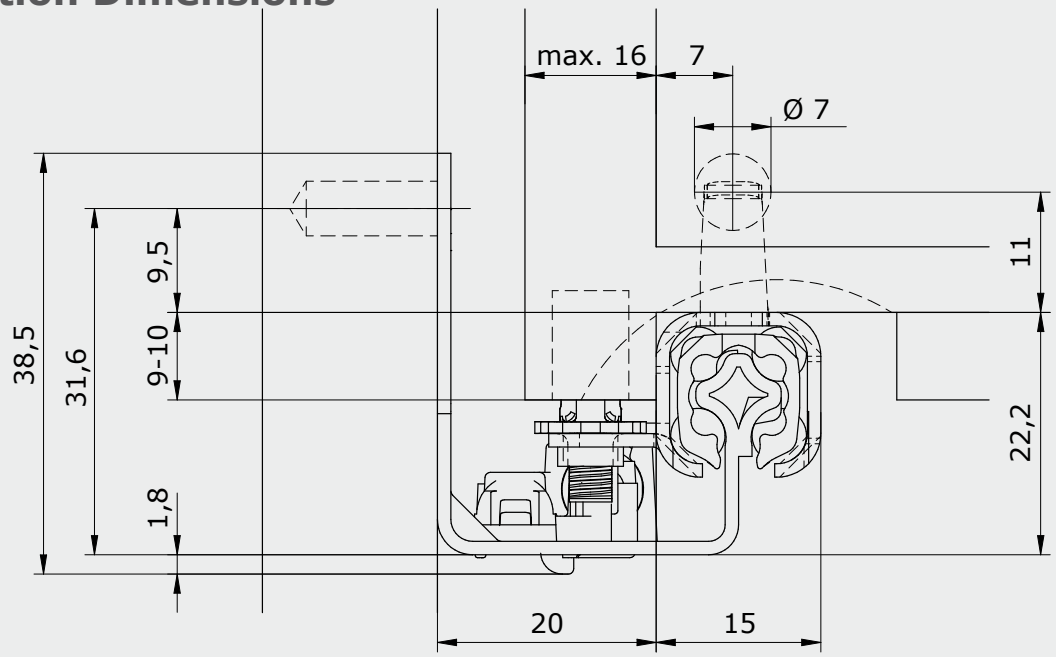

Features

- Star-shaped profile
- Loading capacity up to 25 kg
- Lengths from 250 to 550 mm
- Quick plug-on assembly of the drawer
- Stepless height adjustment
- High tracking stability with smooth running
- Perfect height and lateral stability
- With self-close

Drillings and cut-outs

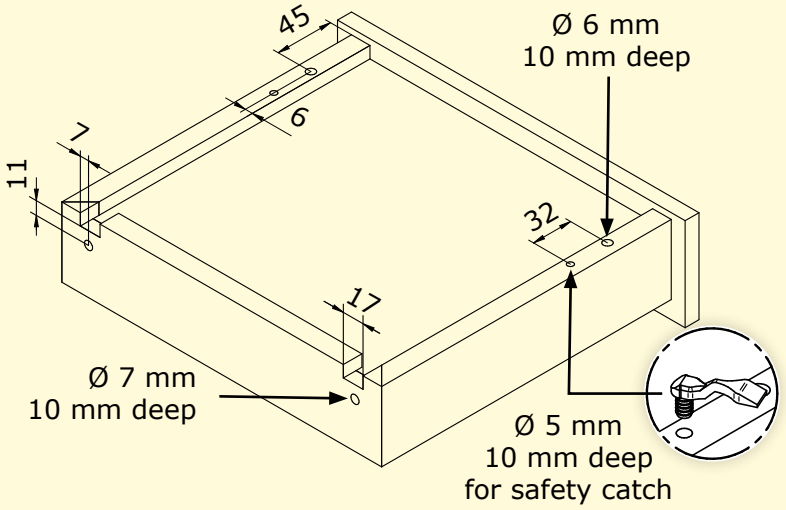

Drawer length in mm	Cabinet runner in mm	Drawer runner in mm	Self-close	Runners/Box	Boxes/Pallet maximum
250	214	260	x	40	45
300	246	310	x	40	35
350	246	360	x	40	35
400	278	410	x	32	42
450	310	460	x	32	42
500	342	510	x	32	30
550	342	560	x	32	30

Length and hole pattern of the cabinet runner

Length cabinet runner A	214	246	278	310	342
Hole distance B	160	192	224	256	288

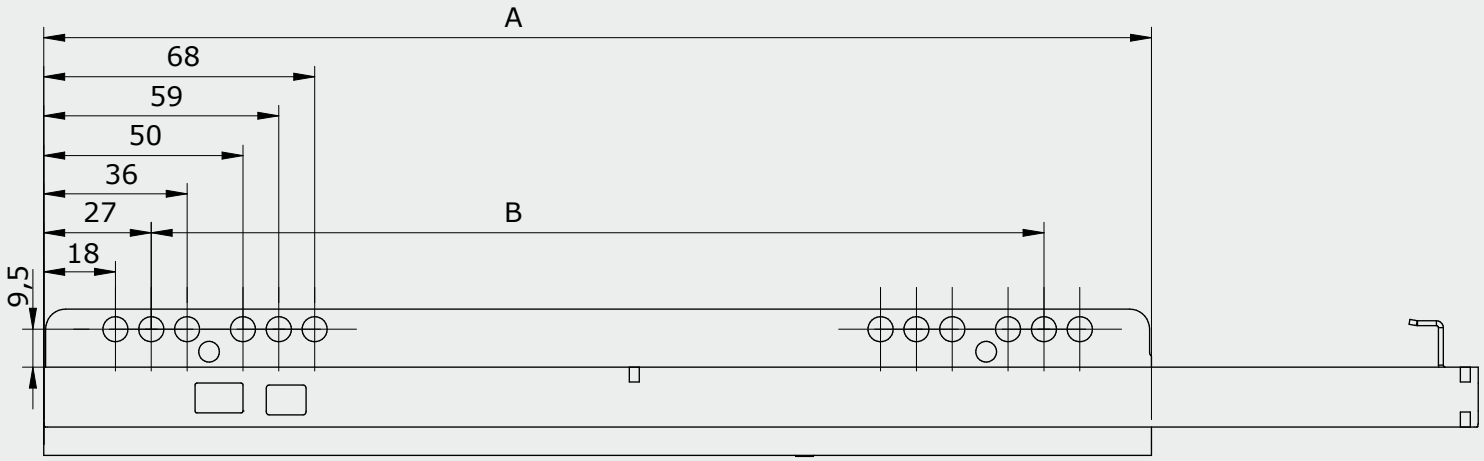

Drillings in the cabinet

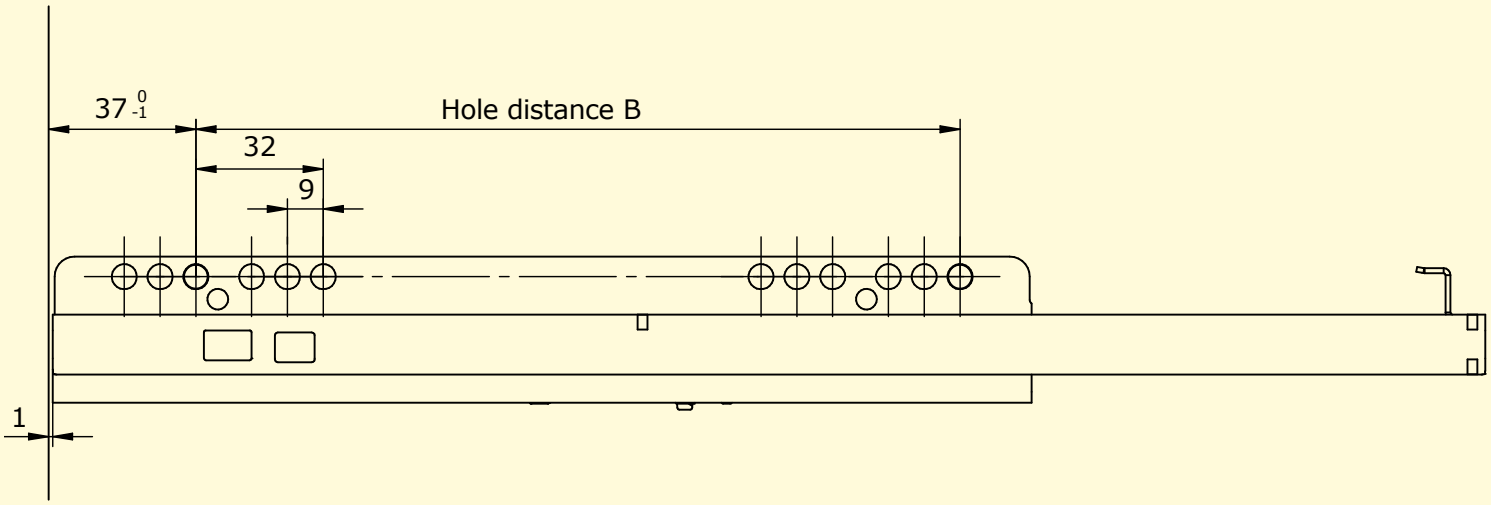

Pieces/Pallet maximum	Weight/Pallet maximum	Order number left side	Order number right side
1800	616	3212501001500	3222501001500
1400	555	3213001001500	3223001001500
1400	583	3213501001500	3223501001500
1344	626	3214001001500	3224001001500
1344	697	3214501001500	3224501001500
960	549	3215001001500	3225001001500
960	572	3215501001500	3225501001500

Single Extension PERFECT

Stub, Self-close, plug-on assembly and Lift Lock

Installation Dimensions

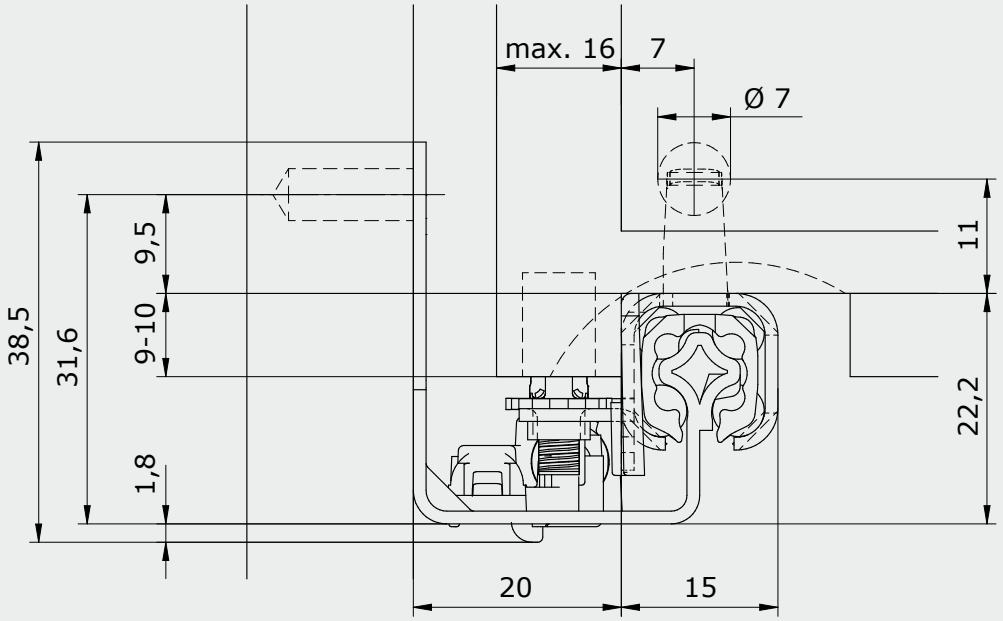

Features

- Star-shaped profile
- Loading capacity up to 25 kg
- Lengths from 250 to 550 mm
- Quick plug-on assembly of the drawer
- Stepless height adjustment
- High tracking stability with smooth running
- Perfect height and lateral stability
- With self-close
- Stub version
- With pre-assembled safety catch

Drillings and cut-outs

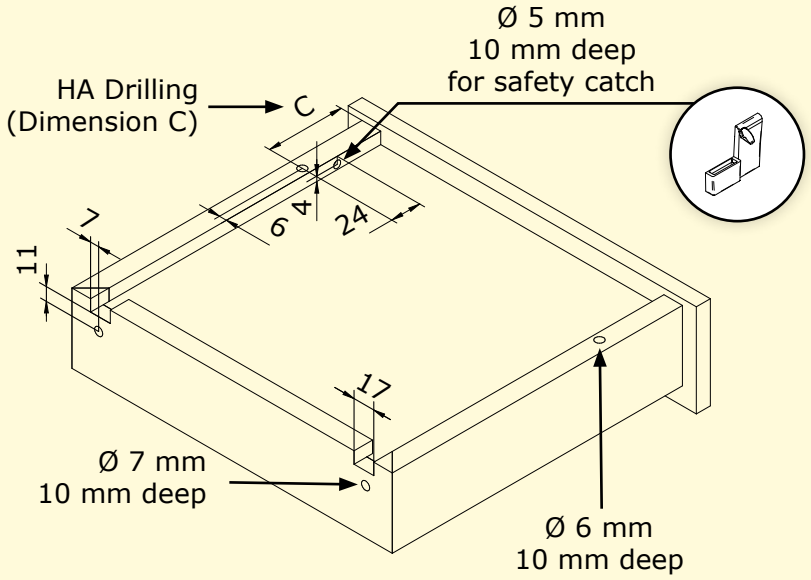

Drawer length in mm	Cabinet runner in mm	Drawer runner in mm	HA Drilling (Dimension C)	Self-close	Runners/Box
250	214	220,5	61,5	x	40
300	246	220,5	111,5	x	40
350	246	253,5	128,5	x	40
400	278	281,5	150,5	x	32
450	310	315,5	166,5	x	32
500	342	341,5	190,5	x	32
550	342	370,5	211,5	x	32

Length and hole pattern of the cabinet runner

Length cabinet runner A	214	246	278	310	342
Hole distance B	160	192	224	256	288

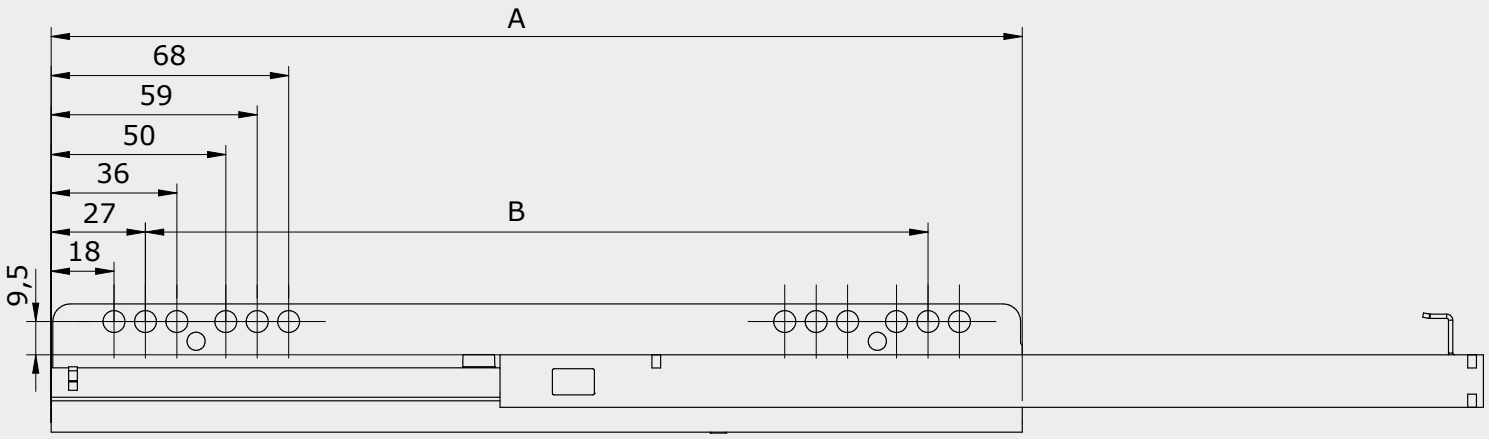

Drillings in the cabinet

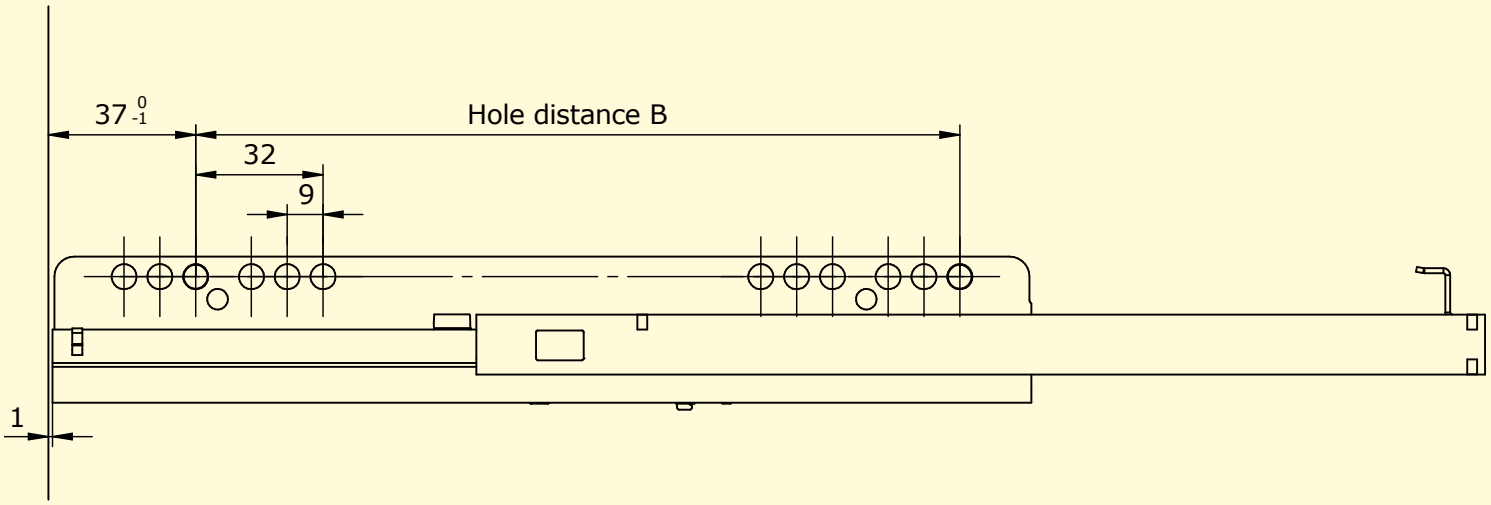

Boxes/Pallet maximum	Pieces/Pallet maximum	Weight/Pallet maximum	Order number left side	Order number right side
45	1800	585	3212501021200	3222501021200
35	1400	502	3213001021200	3223001021200
35	1400	521	3213501021200	3223501021200
42	1344	555	3214001021200	3224001021200
42	1344	619	3214501021200	3224501021200
30	960	486	3215001021200	3225001021200
30	960	498	3215501021200	3225501021200

Single Extension PERFECT
Self-close and coupling

Installation Dimensions

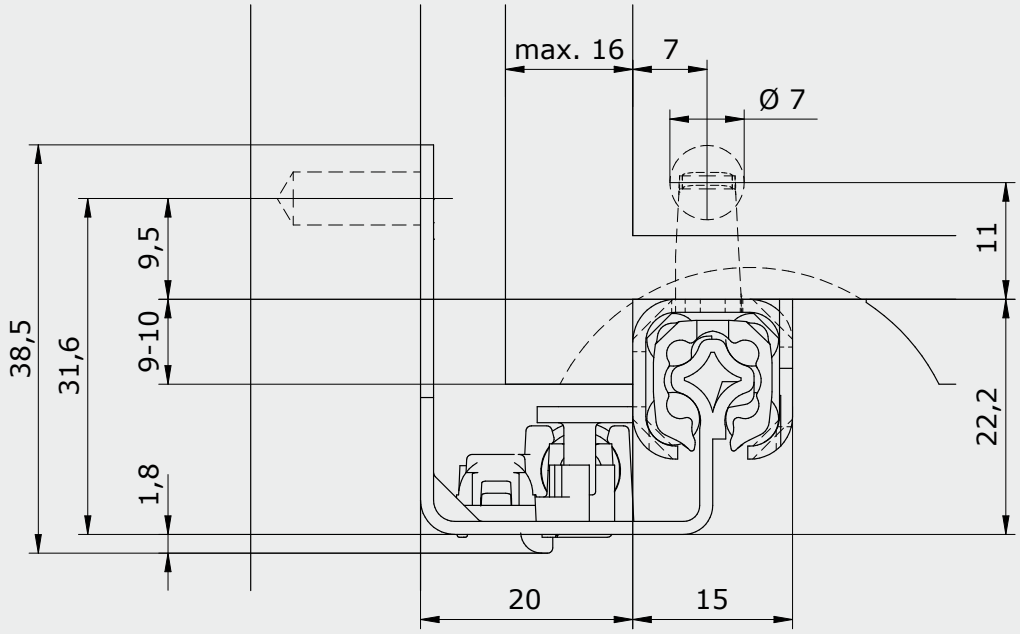

Features

- Star-shaped profile
- Loading capacity up to 25 kg
- Lengths from 250 to 550 mm
- Stepless height adjustment
- High tracking stability with smooth running
- Perfect height and lateral stability
- With self-close
- Optionally with 2D or 3D coupling

Coupling technology

With the different coupling options, drawers can be installed and removed in no time. The system combines pull-out protection, coupling and adjustment in a single component. Available in either a 2D version (height and side adjustment) or a 3D version (height, side and depth adjustment). This allows precise and uniform gap alignment to be achieved quickly, easily and without tools.

2D



3D



Drawer length in mm	Cabinet runner in mm	Drawer runner in mm	Self-close	Runners/Box	Boxes/Pallet maximum
250	214	260	x	40	45
300	246	310	x	40	35
350	246	360	x	40	35
400	278	410	x	32	42
450	310	460	x	32	42
500	342	510	x	32	30
550	342	560	x	32	30

Length and hole pattern of the cabinet runner

Length cabinet runner A	214	246	278	310	342
Hole distance B	160	192	224	256	288

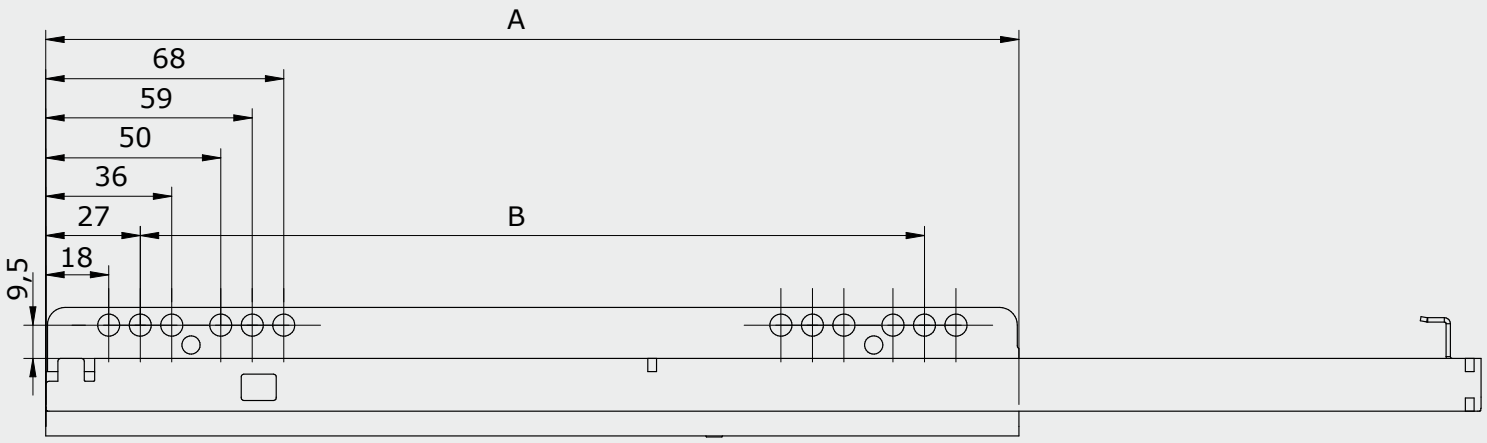

Drillings in the cabinet

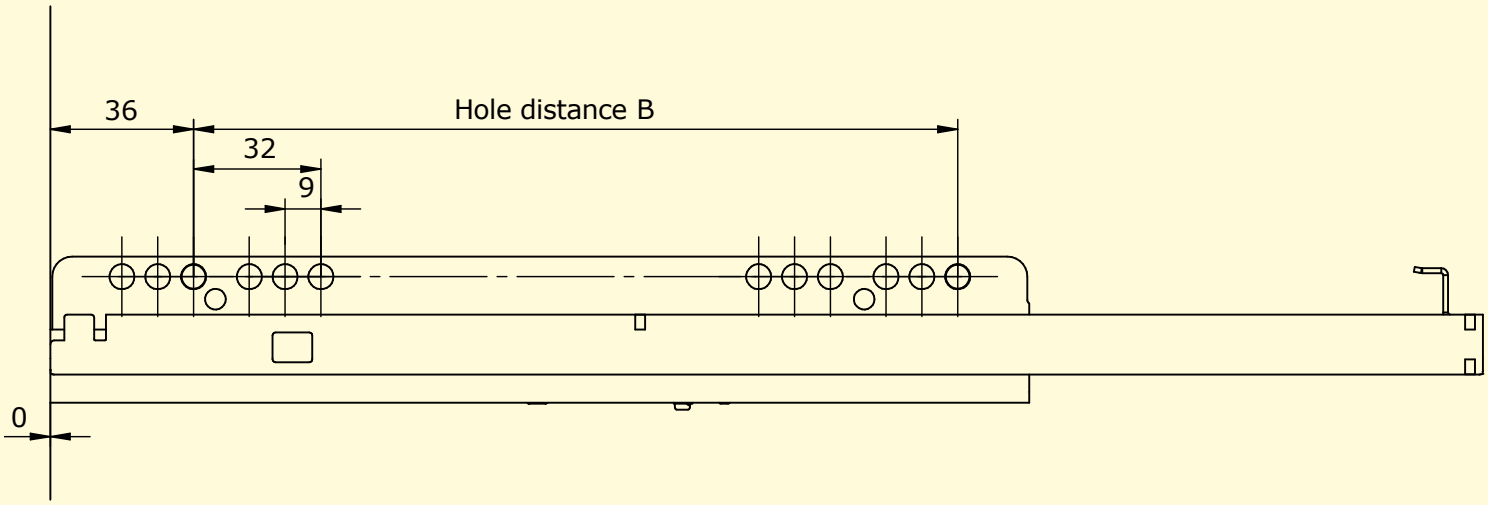

Pieces/Pallet maximum	Weight/Pallet maximum	Order number left side	Order number right side
1800	601	3212501001100	3222501001000
1400	544	3213001001100	3223001001000
1400	573	3213501001100	3223501001000
1344	619	3214001001100	3224001001000
1344	691	3214501001100	3224501001000
960	548	3215001001100	3225001001000
960	567	3215501001100	3225501001000

Single Extension PERFECT
Soft-close and plug-on assembly

Installation Dimensions

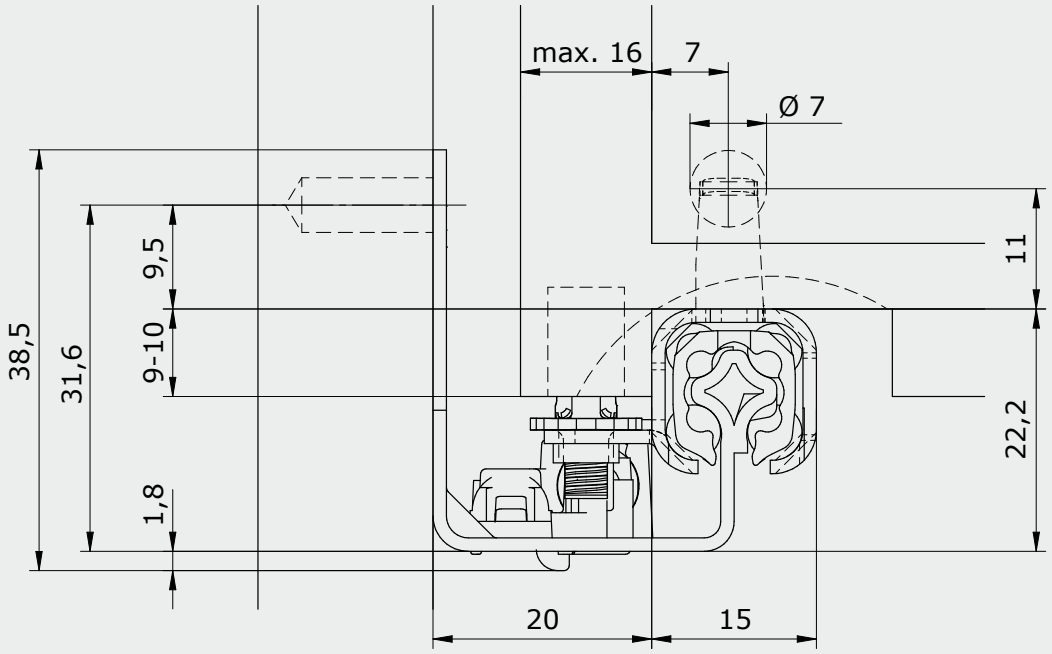

Features

- Star-shaped profile
- Loading capacity up to 25 kg
- Lengths from 250 to 550 mm
- Quick plug-on assembly of the drawer
- Stepless height adjustment
- High tracking stability with smooth running
- Perfect height and lateral stability
- With soft-close

Drillings and cut-outs

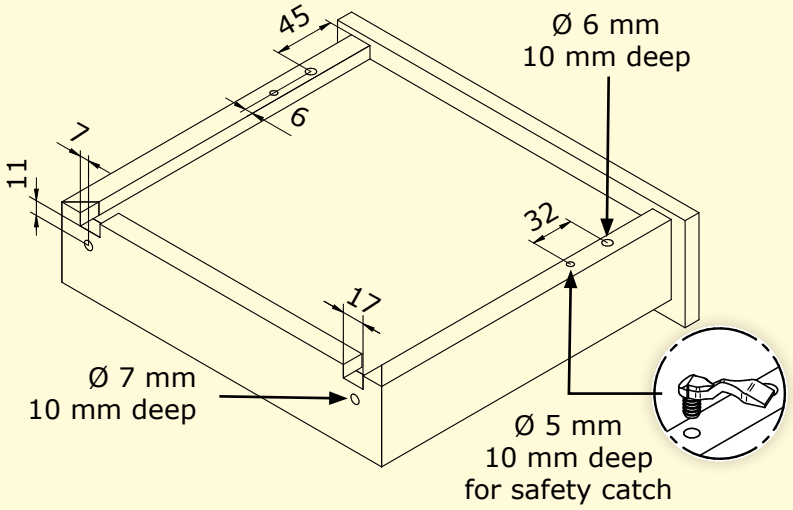

Drawer length in mm	Cabinet runner in mm	Drawer runner in mm	Soft-close	Runners/Box	Boxes/Pallet maximum
250	214	260	x	40	45
300	246	310	x	40	35
350	246	360	x	40	35
400	278	410	x	32	42
450	310	460	x	32	42
500	342	510	x	32	30
550	342	560	x	32	30

Length and hole pattern of the cabinet runner

Length cabinet runner A	214	246	278	310	342
Hole distance B	160	192	224	256	288

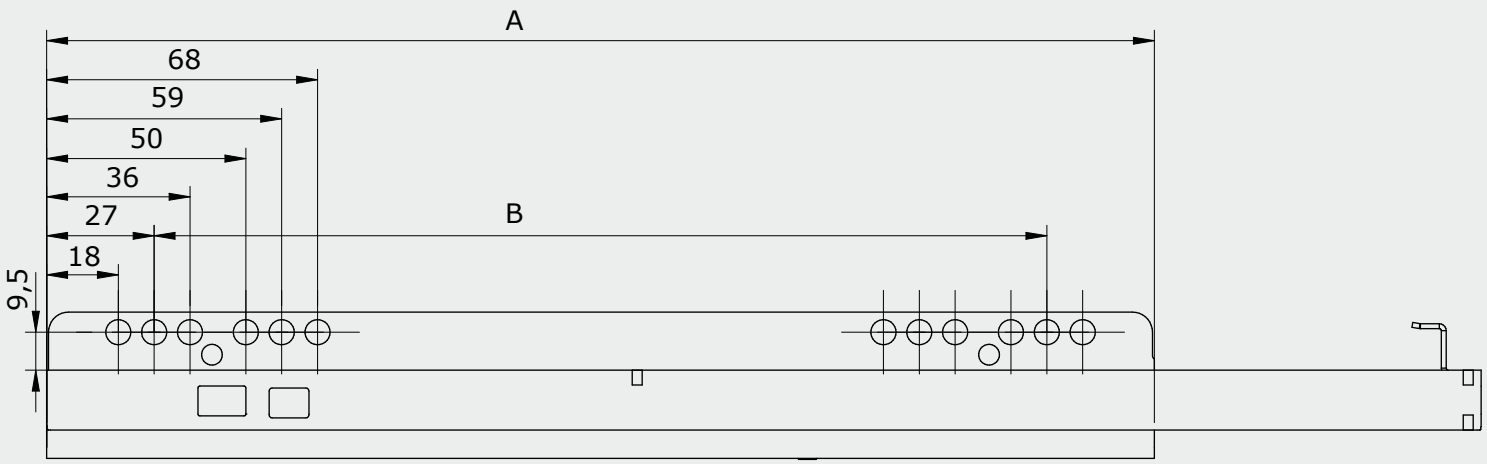

Drillings in the cabinet

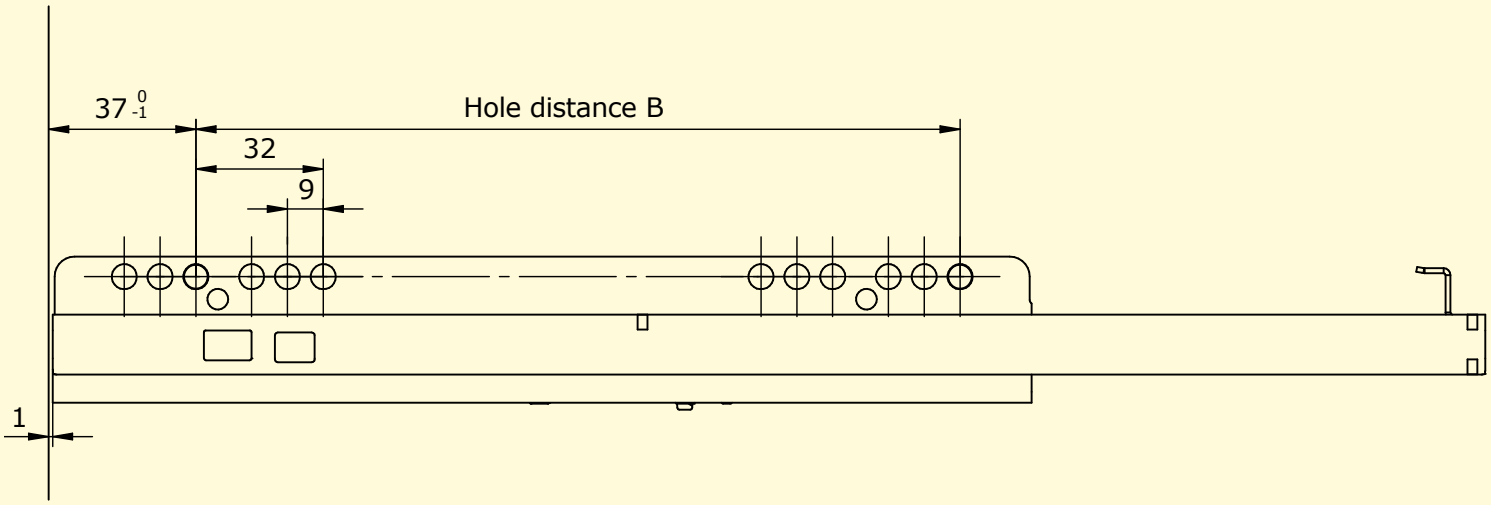

Pieces/Pallet maximum	Weight/Pallet maximum	Order number left side	Order number right side
1800	616	3212502011500	3222502011500
1400	555	3213002011500	3223002011500
1400	583	3213502011500	3223502011500
1344	626	3214002011500	3224002011500
1344	697	3214502011500	3224502011500
960	549	3215002011500	3225002011500
960	572	3215502011500	3225502011500

Single Extension PERFECT

Stub, Soft-close, plug-on assembly and Lift Lock

Installation Dimensions

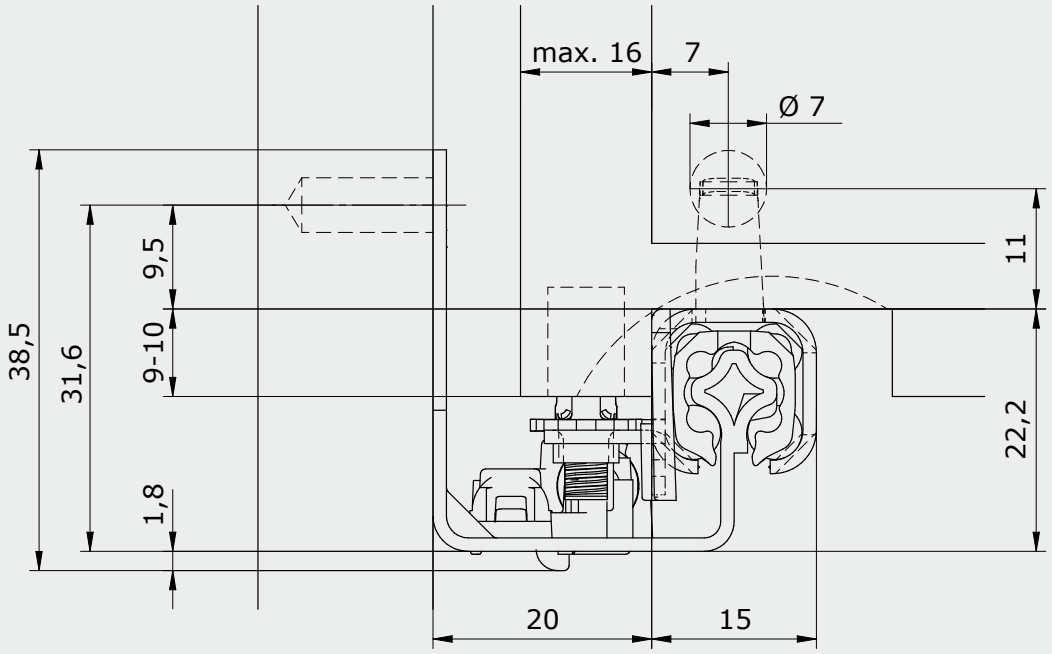

Features

- Star-shaped profile
- Loading capacity up to 25 kg
- Lengths from 250 to 550 mm
- Quick plug-on assembly of the drawer
- Stepless height adjustment
- High tracking stability with smooth running
- Perfect height and lateral stability
- With soft-close
- Stub version
- With pre-assembled safety catch

Drillings and cut-outs

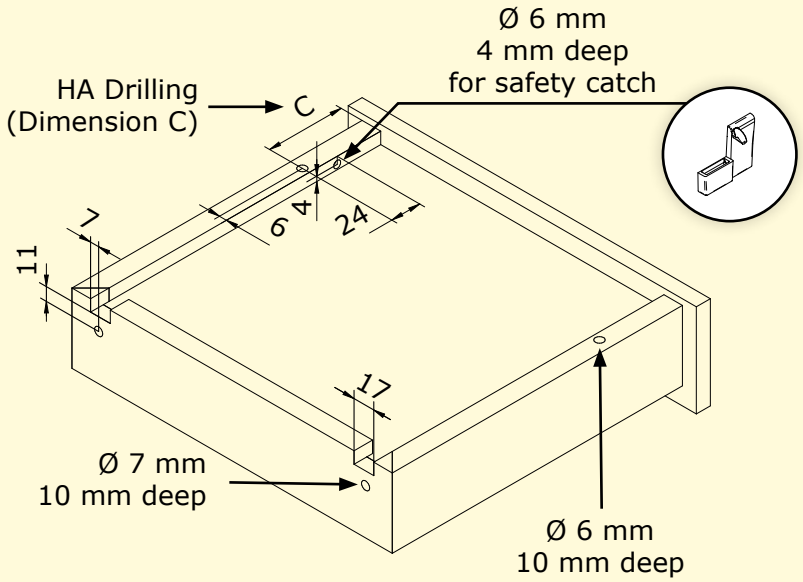

Drawer length in mm	Cabinet runner in mm	Drawer runner in mm	HA Drilling (Dimension C)	Soft-close	Runners/Box
250	214	220,5	61,5	x	40
300	246	220,5	111,5	x	40
350	246	253,5	128,5	x	40
400	278	281,5	150,5	x	32
450	310	315,5	166,5	x	32
500	342	341,5	190,5	x	32
550	342	370,5	211,5	x	32

Length and hole pattern of the cabinet runner

Length cabinet runner A	214	246	278	310	342
Hole distance B	160	192	224	256	288

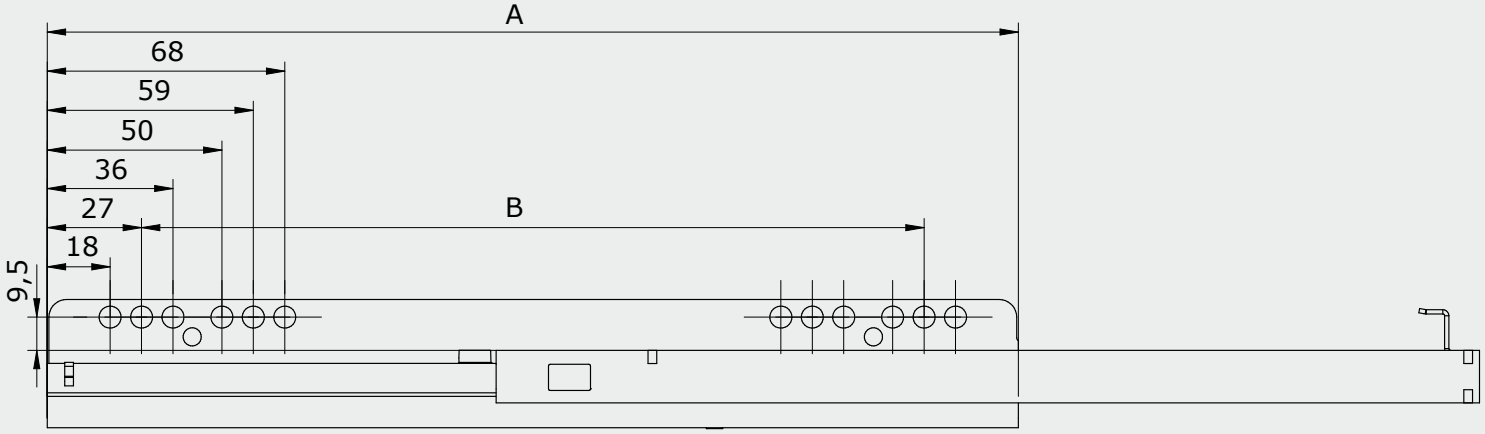

Drillings in the cabinet

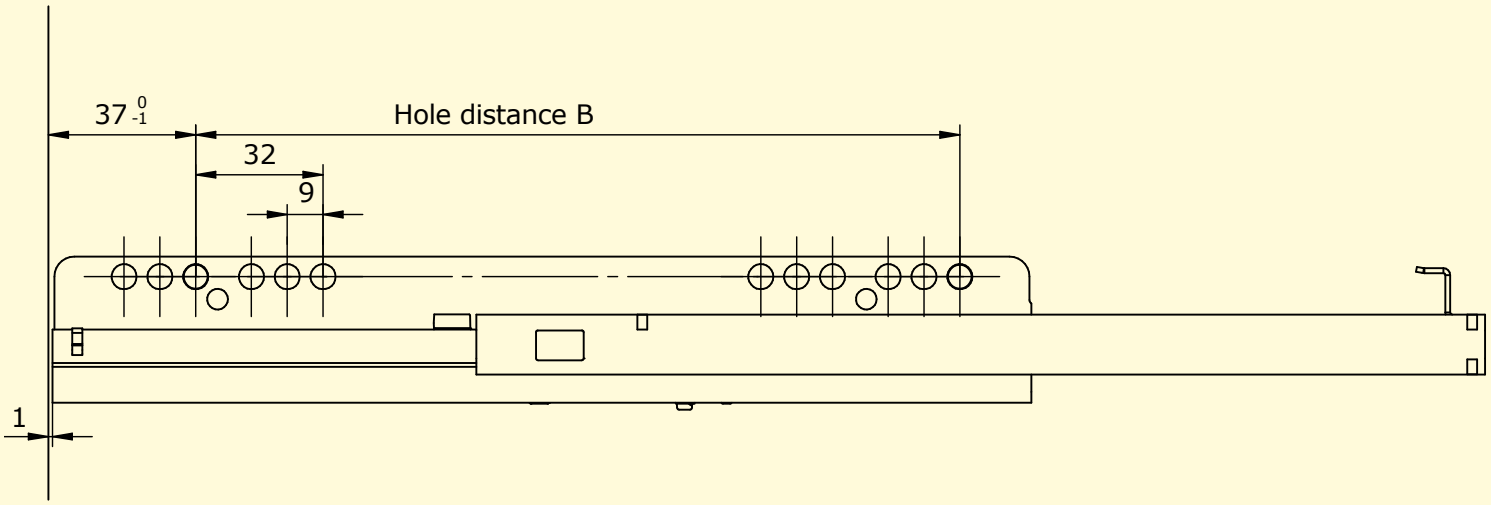

Boxes/Pallet maximum	Pieces/Pallet maximum	Weight/Pallet maximum	Order number left side	Order number right side
45	1800	585	3212502031200	3222502031200
35	1400	502	3213002031200	3223002031200
35	1400	521	3213502031200	3223502031200
42	1344	555	3214002031200	3224002031200
42	1344	619	3214502031200	3224502031200
30	960	486	3215002031200	3225002031200
30	960	498	3215502031200	3225502031200

Single Extension PERFECT
Soft-close, plug-on assembly and Lift Lock

Installation Dimensions

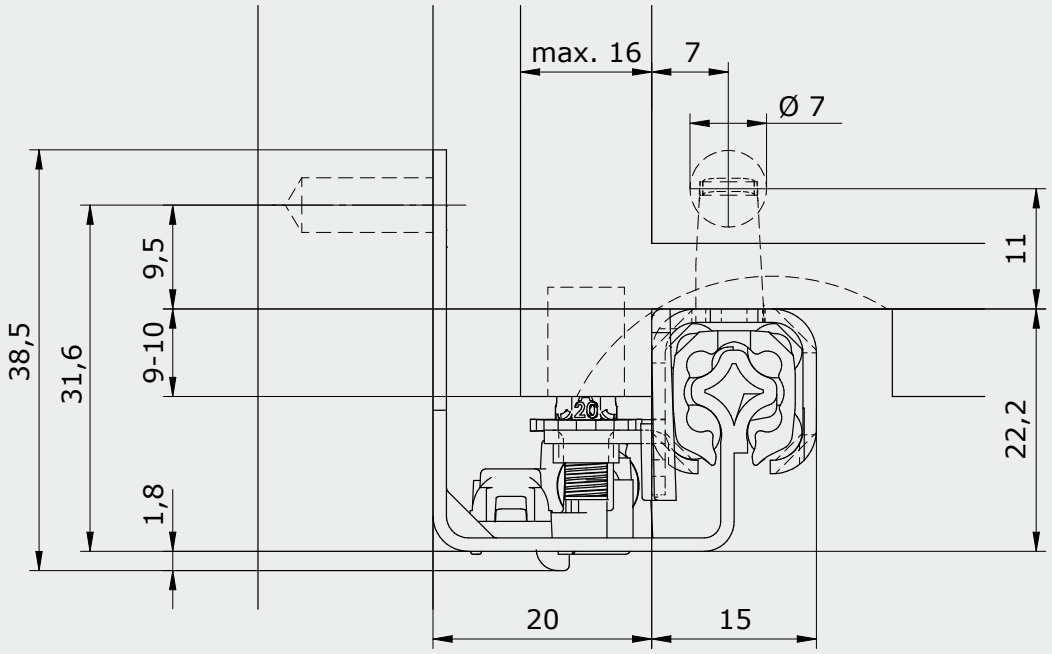

Features

- Star-shaped profile
- Loading capacity up to 25 kg
- Lengths from 250 to 550 mm
- Quick plug-on assembly of the drawer
- Stepless height adjustment
- High tracking stability with smooth running
- Perfect height and lateral stability
- With soft-close
- With pre-assembled safety catch

Drillings and cut-outs

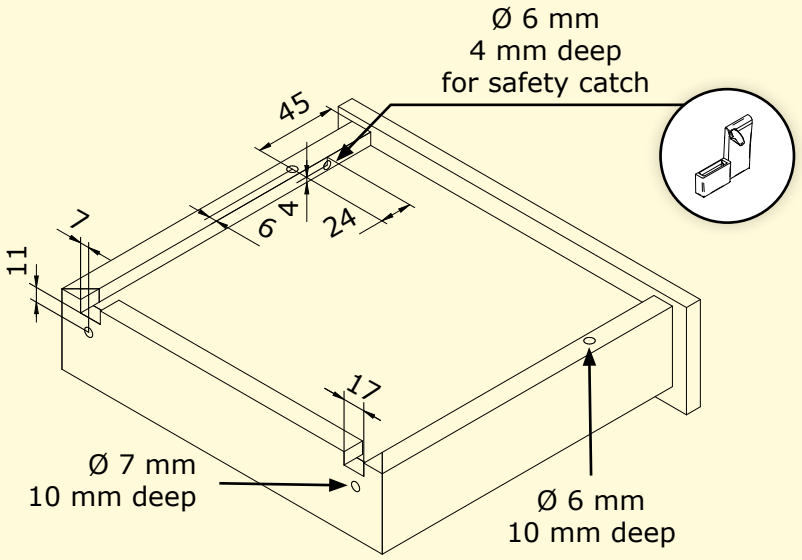

Drawer length in mm	Cabinet runner in mm	Drawer runner in mm	Soft-close	Runners/Box	Boxes/Pallet maximum
250	214	237	x	40	45
300	246	287	x	40	35
350	246	337	x	40	35
400	278	387	x	32	42
450	310	437	x	32	42
500	342	487	x	32	30
550	342	537	x	32	30

Length and hole pattern of the cabinet runner

Length cabinet runner A	214	246	278	310	342
Hole distance B	160	192	224	256	288

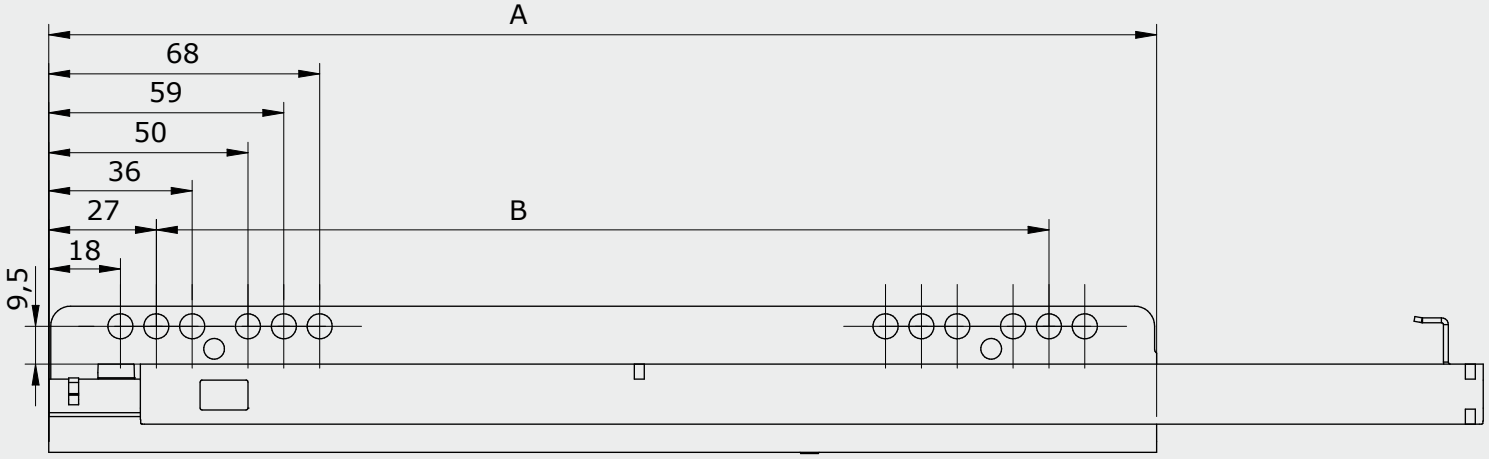

Drillings in the cabinet

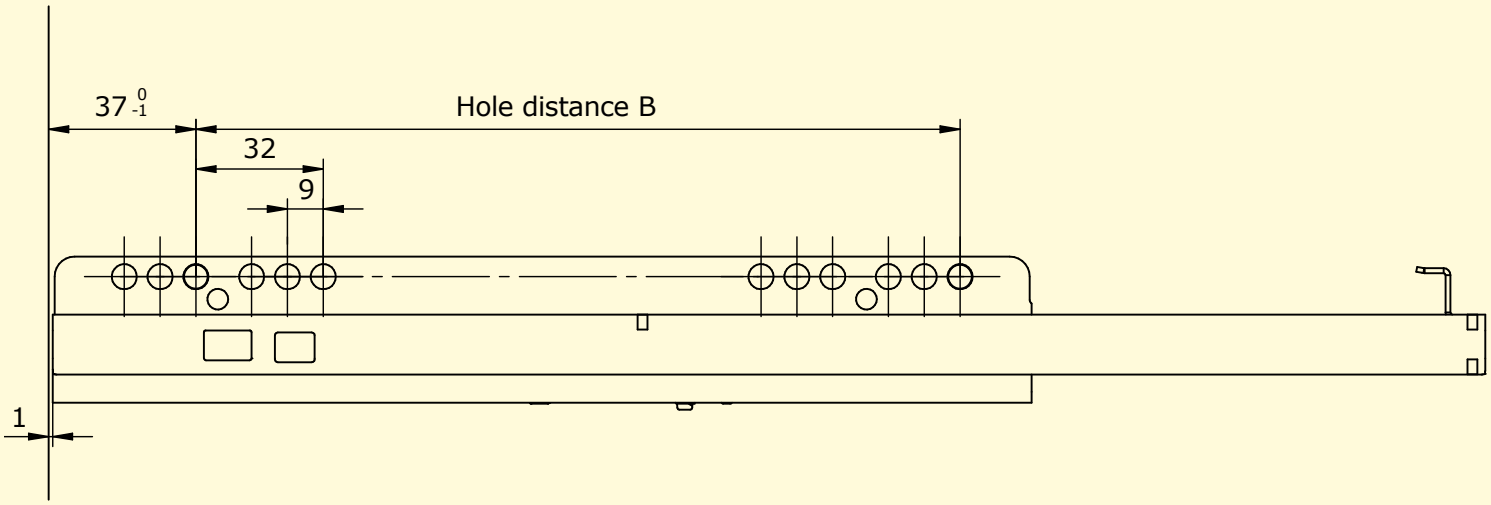

Pieces/Pallet maximum	Weight/Pallet maximum	Order number left side	Order number right side
1800	576	3212502011200	3222502011200
1400	518	3213002011200	3223002011200
1400	547	3213502011200	3223502011200
1344	591	3214002011200	3224002011200
1344	664	3214502011200	3224502011200
960	521	3215002011200	3225002011200
960	541	3215502011200	3225502011200

Single Extension PERFECT
Soft-close and coupling

Installation Dimensions

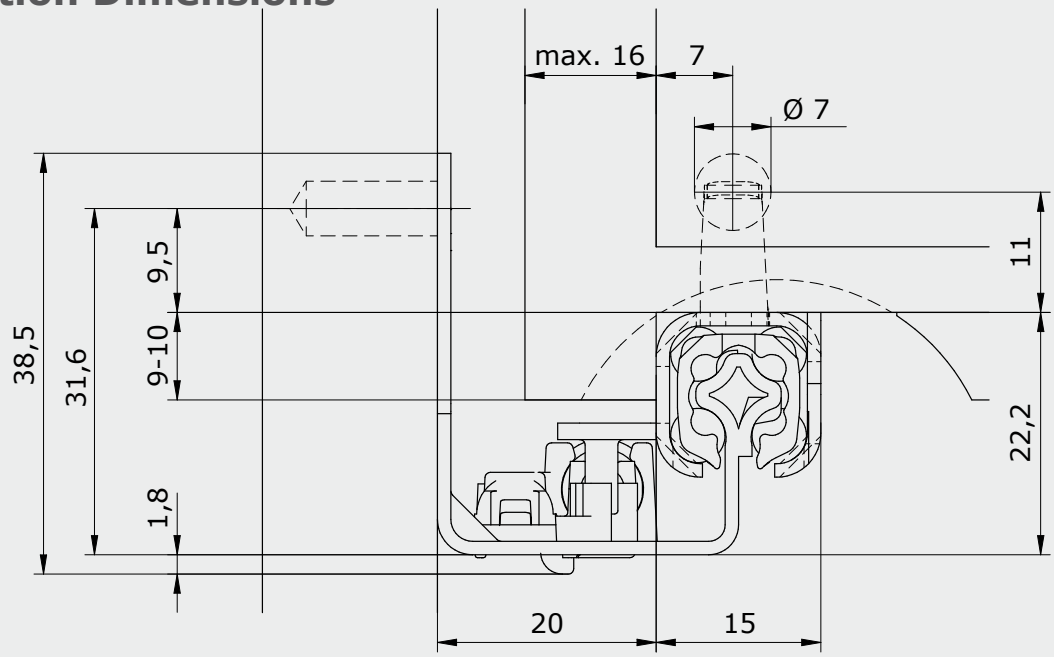

Features

- Star-shaped profile
- Loading capacity up to 25 kg
- Lengths from 250 to 550 mm
- Stepless height adjustment
- High tracking stability with smooth running
- Perfect height and lateral stability
- With soft-close
- Optionally with 2D or 3D coupling

Coupling technology

With the different coupling options, drawers can be installed and removed in no time. The system combines pull-out protection, coupling and adjustment in a single component. Available in either a 2D version (height and side adjustment) or a 3D version (height, side and depth adjustment). This allows precise and uniform gap alignment to be achieved quickly, easily and without tools.

2D



3D



Drawer length in mm	Cabinet runner in mm	Drawer runner in mm	Soft-close	Runners/Box	Boxes/Pallet maximum
250	214	260	x	40	45
300	246	310	x	40	35
350	246	360	x	40	35
400	278	410	x	32	42
450	310	460	x	32	42
500	342	510	x	32	30
550	342	560	x	32	30

Length and hole pattern of the cabinet runner

Length cabinet runner A	214	246	278	310	342
Hole distance B	160	192	224	256	288

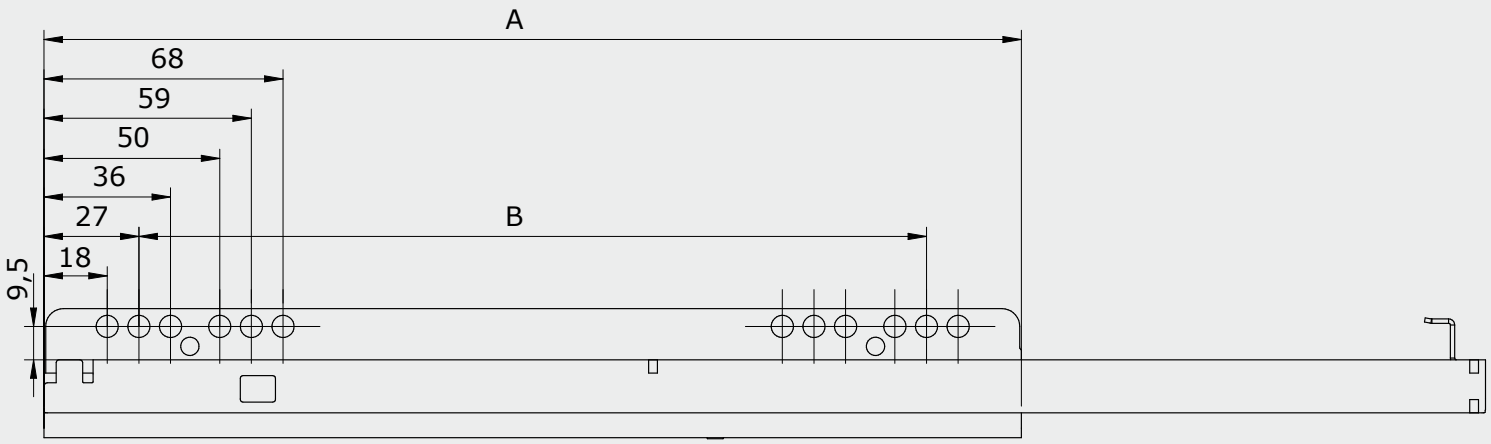

Drillings in the cabinet

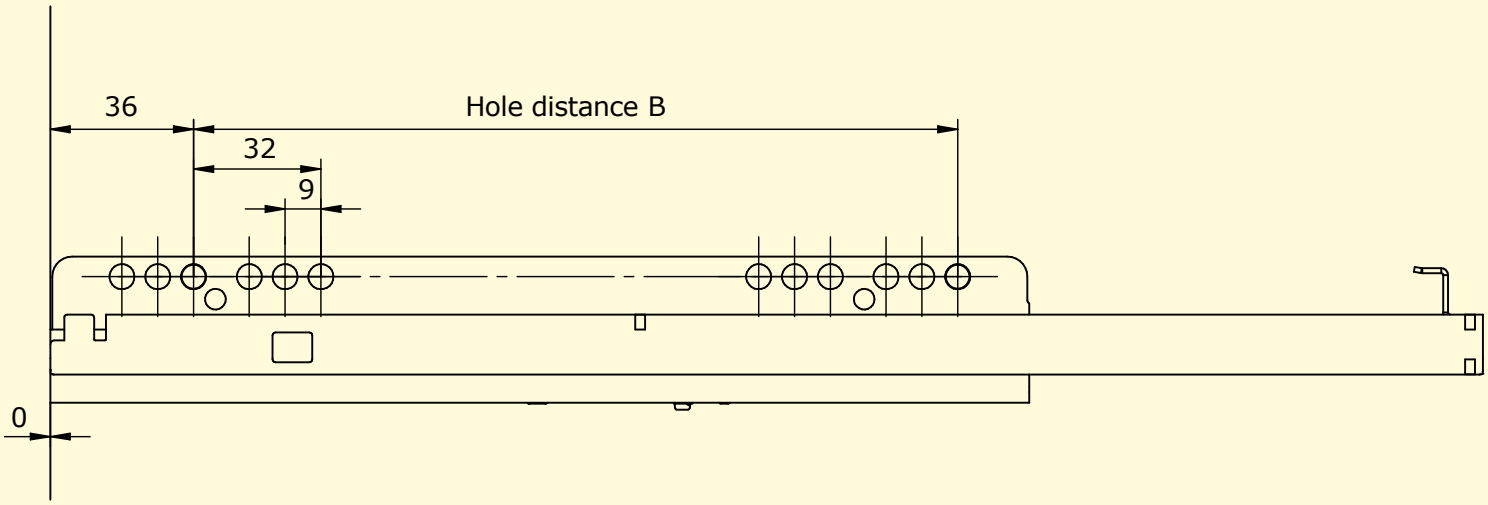

Pieces/Pallet maximum	Weight/Pallet maximum	Order number left side	Order number right side
1800	616	3212502011100	3222502011000
1400	544	3213002011100	3223002011000
1400	573	3213502011100	3223502011000
1344	619	3214002011100	3224002011000
1344	691	3214502011100	3224502011000
960	548	3215002011100	3225002011000
960	572	3215502011100	3225502011000

Single Extension PERFECT

Push-to-Open and plug-on assembly

Installation Dimensions

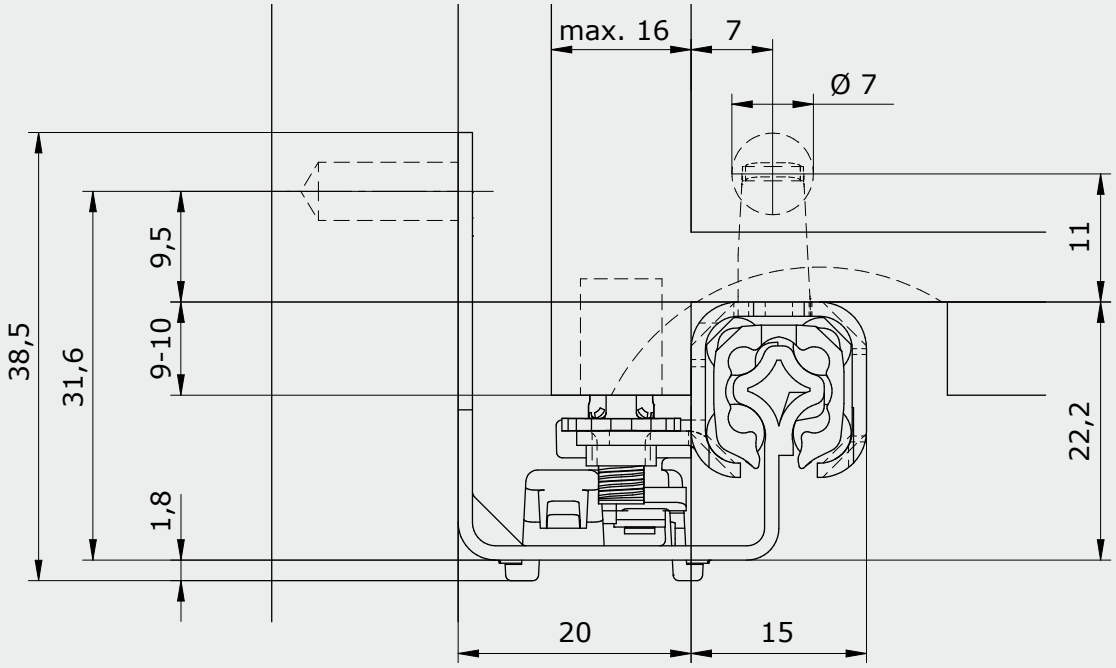

Features

- Star-shaped profile
- Loading capacity up to 25 kg
- Lengths from 250 to 550 mm
- Quick plug-on assembly of the drawer
- Stepless height adjustment
- High tracking stability with smooth running
- Perfect height and lateral stability
- Trigger path/reveal gap = 3 mm
- With push-to-open

Drillings and cut-outs

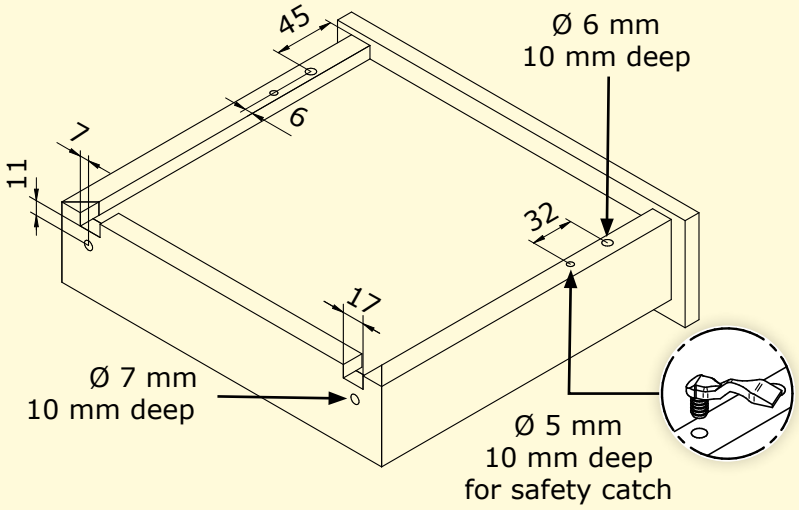

Drawer length in mm	Cabinet runner in mm	Drawer runner in mm	Push-to-Open	Runners/Box	Boxes/Pallet maximum
250	214	260	x	40	45
300	246	310	x	40	35
350	246	360	x	40	35
400	278	410	x	32	42
450	310	460	x	32	42
500	342	510	x	32	30
550	342	560	x	32	30

Length and hole pattern of the cabinet runner

Length cabinet runner A	214	246	278	310	342
Hole distance B	160	192	224	256	288

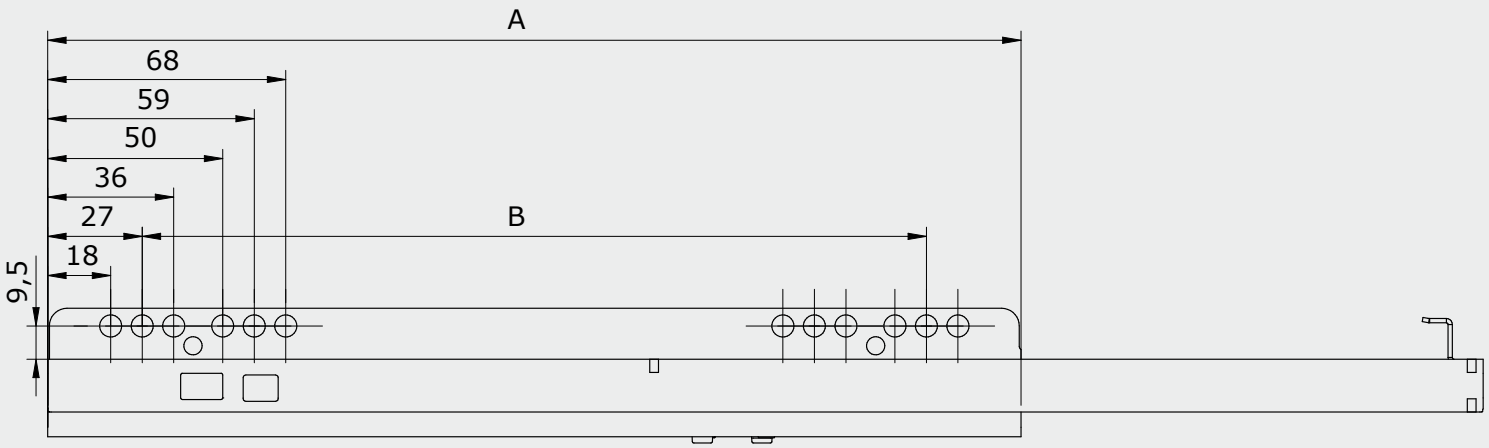

Drillings in the cabinet

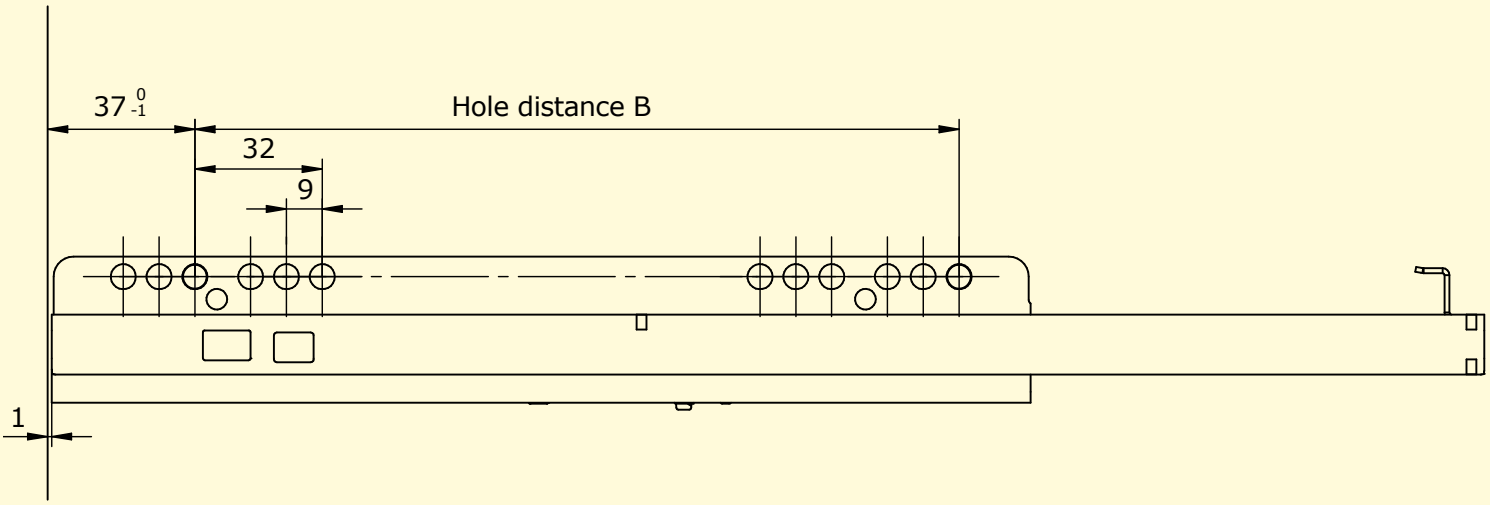

Pieces/Pallet maximum	Weight/Pallet maximum	Order number left side	Order number right side
1800	576	3212503001500	3222503001500
1400	523	3213003001500	3223003001500
1400	552	3213503001500	3223503001500
1344	597	3214003001500	3224003001500
1344	668	3214503001500	3224503001500
960	534	3215003001500	3225003001500
960	551	3215503001500	3225503001500

Single Extension PERFECT
Push-to-Open and Coupling

Installation Dimensions

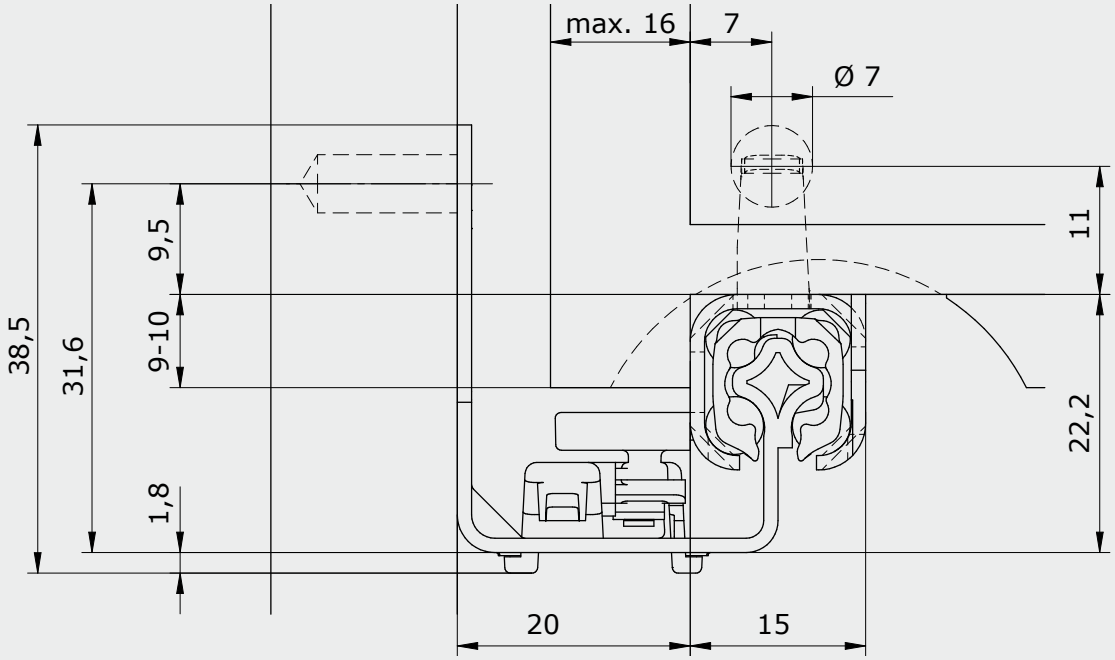

Features

- Star-shaped profile
- Loading capacity up to 25 kg
- Lengths from 250 to 550 mm
- Stepless height adjustment
- High tracking stability with smooth running
- Perfect height and lateral stability
- Trigger travel/aperture gap = 3 mm
- With push-to-open
- Optionally with 2D or 3D coupling

Coupling technology

With the different coupling options, drawers can be installed and removed in no time. The system combines pull-out protection, coupling and adjustment in a single component. Available in either a 2D version (height and side adjustment) or a 3D version (height, side and depth adjustment). This allows precise and uniform gap alignment to be achieved quickly, easily and without tools.

2D



3D



Drawer length in mm	Cabinet runner in mm	Drawer runner in mm	Push-to-Open	Runners/Box	Boxes/Pallet maximum
250	214	260	x	40	45
300	246	310	x	40	35
350	246	360	x	40	35
400	278	410	x	32	42
450	310	460	x	32	42
500	342	510	x	32	30
550	342	560	x	32	30

Length and hole pattern of the cabinet runner

Length cabinet runner A	214	246	278	310	342
Hole distance B	160	192	224	256	288

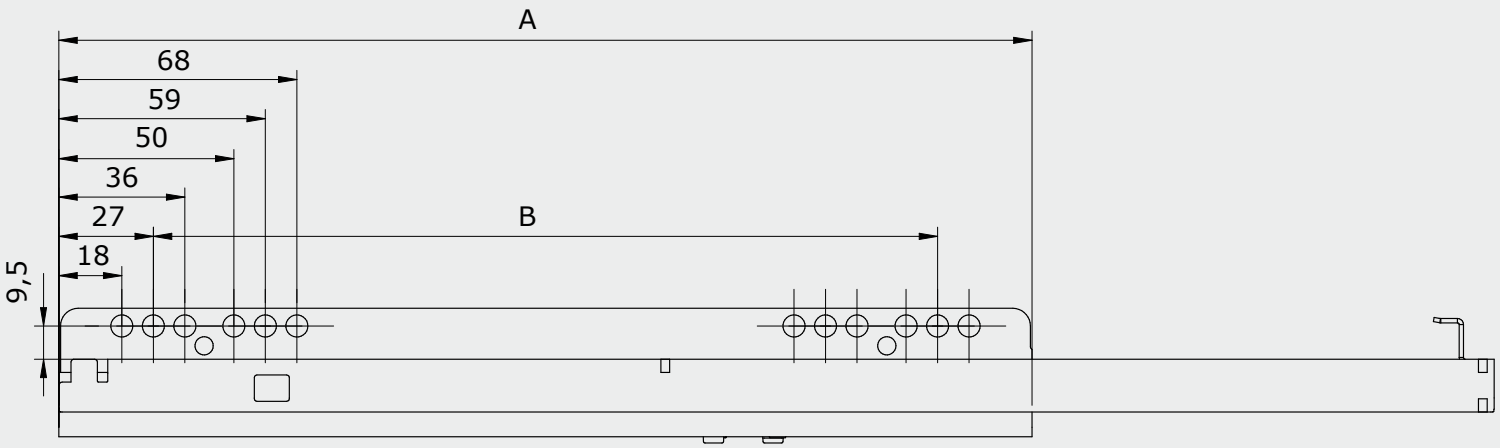

Drillings in the cabinet

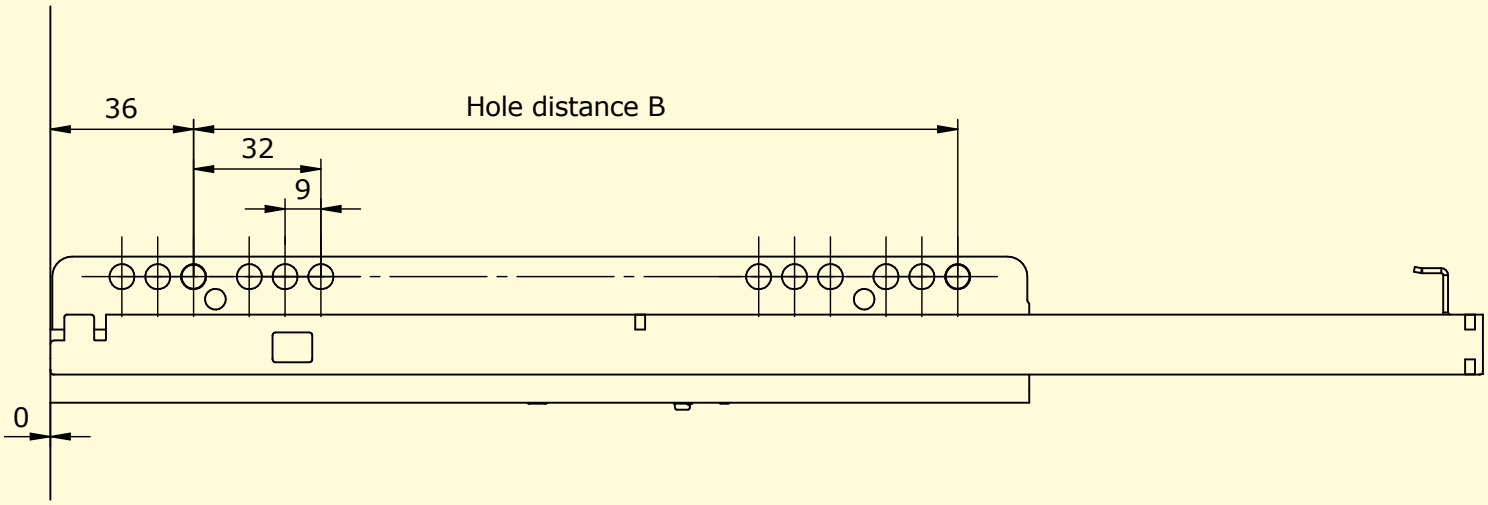

Pieces/Pallet maximum	Weight/Pallet maximum	Order number left side	Order number right side
1800	567	3212503001100	3222503001000
1400	514	3213003001100	3223003001000
1400	543	3213503001100	3223503001000
1344	589	3214003001100	3224003001000
1344	661	3214503001100	3224503001000
960	526	3215003001100	3225003001000
960	545	3215503001100	3225503001000

Single Extension PERFECT

Push-to-Open synchronization and plug-on assembly

Installation Dimensions

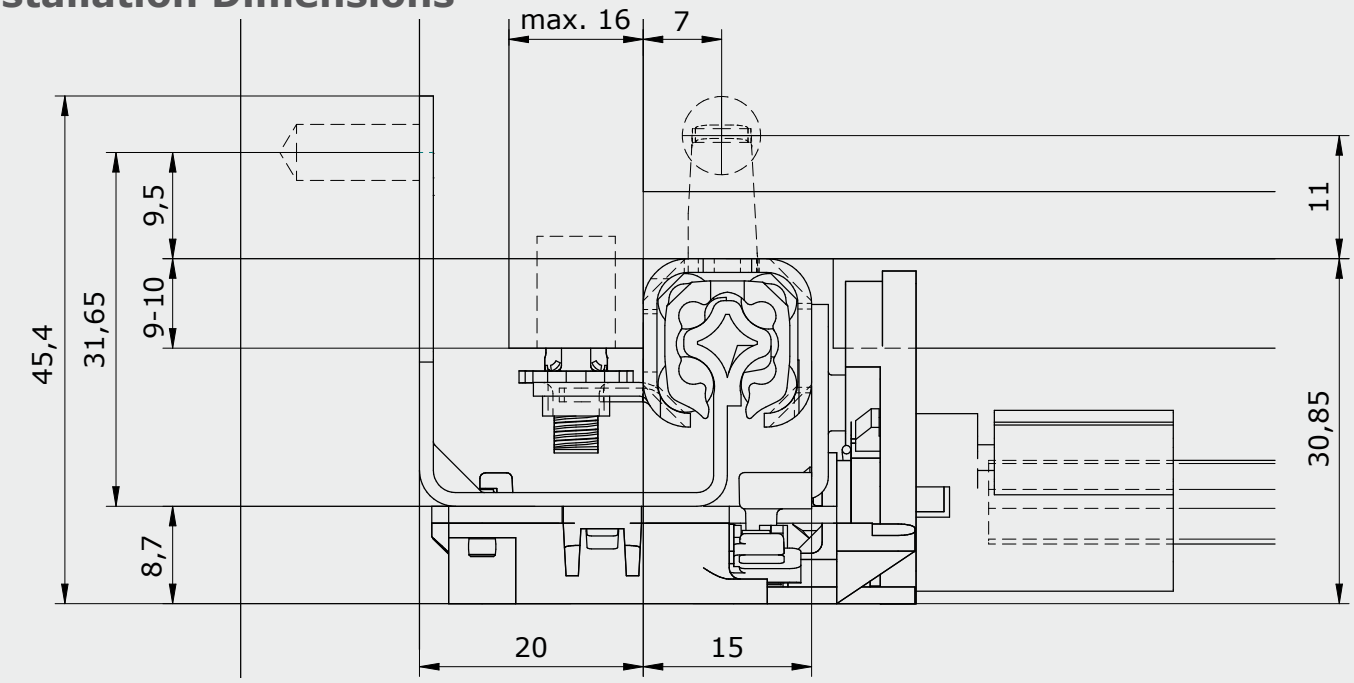

Features

- Star-shaped profile
- Loading capacity up to 25 kg
- Lengths from 250 to 550 mm
- Quick plug-on assembly of the drawer
- Stepless height adjustment
- High tracking stability with smooth running
- Perfect height and lateral stability
- Trigger path/Reveal gap = 3 mm
- With push-to-open
- Greater sensitivity through synchronization

Drillings and cut-outs

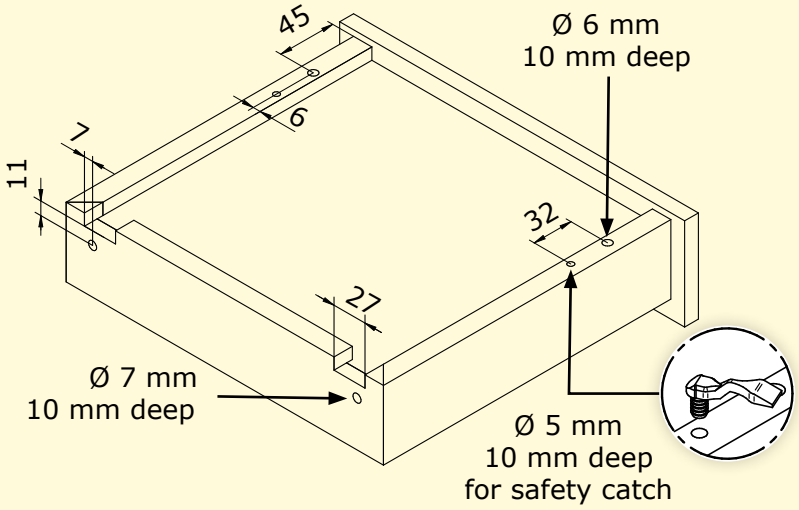

Drawer length in mm	Cabinet runner in mm	Drawer runner in mm	Push-to-Open synchronization	Runners/Box	Boxes/Pallet maximum
250	214	260	x	16	45
300	246	310	x	16	35
350	246	360	x	16	35
400	278	410	x	16	42
450	310	460	x	16	42
500	342	510	x	16	30
550	342	560	x	16	30

Length and hole pattern of the cabinet runner

Length cabinet runner A	214	246	278	310	342
Hole distance B	160	192	224	256	288

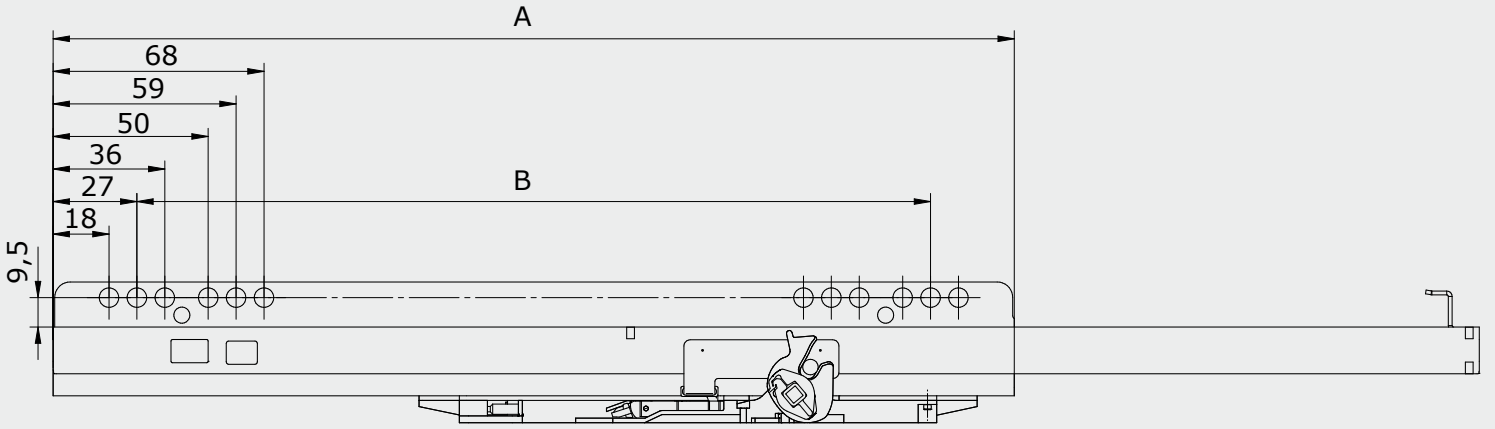

Drillings in the cabinet

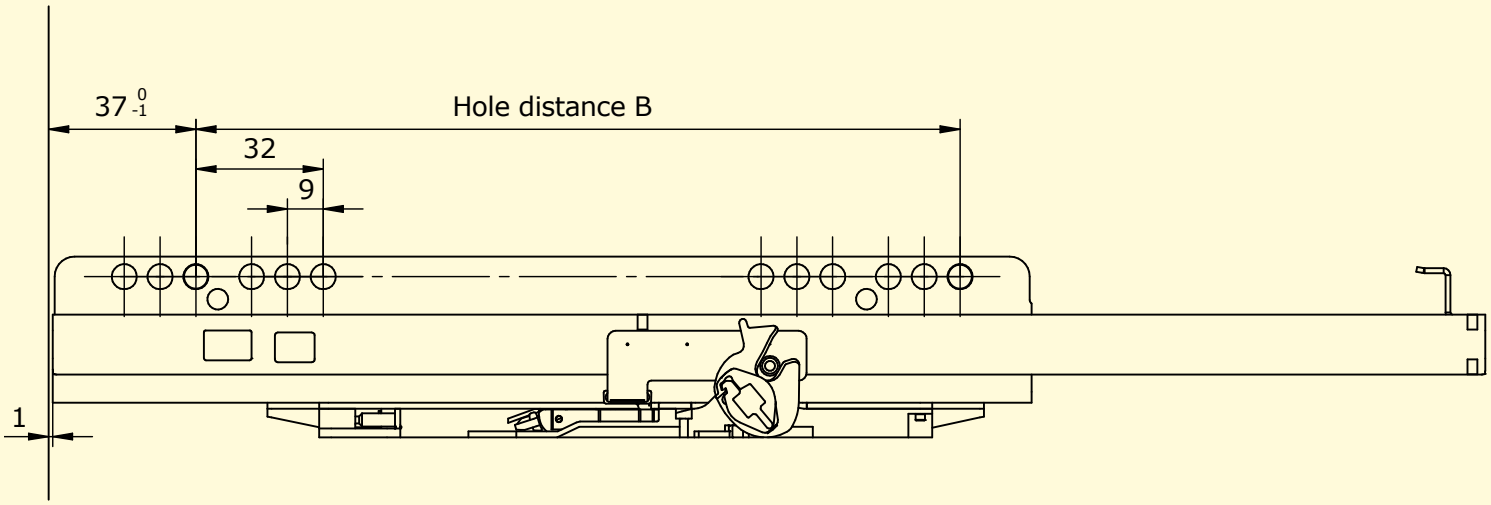

Pieces/Pallet maximum	Weight/Pallet maximum	Order number left side	Order number right side
720	270	3212503011500	3222503011500
560	244	3213013011500	3223013011500
560	255	3213503011500	3223503011500
672	335	3214003011500	3224003011500
672	370	3214503011500	3224503011500
480	295	3215003011500	3225003011500
480	306	3215503011500	3225503011500

Single Extension PERFECT
Push-to-Open synchronization and plug-on assembly

Calculation synchronization linkage

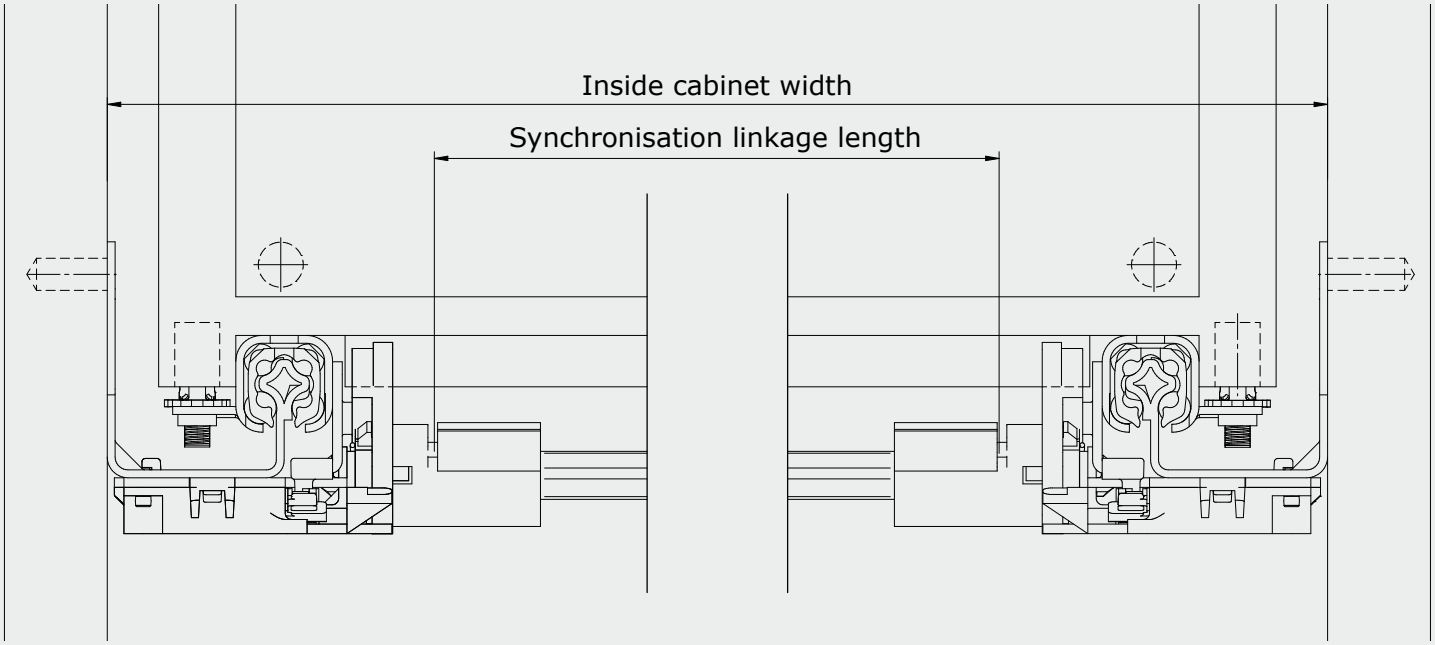

Example calculation
Synchronisation linkage length = Inside cabinet width - 102 mm

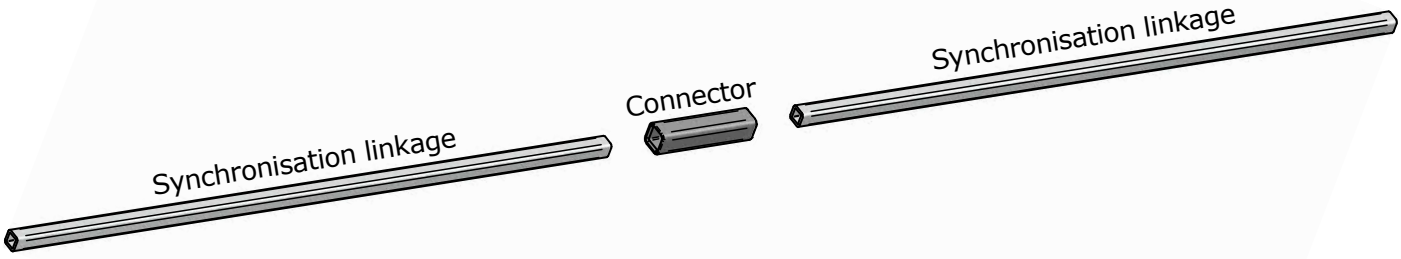

Article overview

Product:	Synchronization linkage	Connector
Dimensions:	6x6 mm, 1100 mm long	9x9 mm, 40 mm long
Material:	Aluminium	Plastic
Info:	For self-cutting	For extending the synchronizer linkage
Order number:	2060000000026	2060000000027

Single Extension PERFECT
Offset hanging tab



Single Extension PERFECT

Offset hanging tab _____ Page 32

Product

Of course, we also manufacture custom drawer slides tailored to the specific needs of our clients. Based on the PERFECT slide, we offer drawer slides with offset mounting brackets to create the impression of a full-extension slide. Together with our experienced technical team, we provide professional support until we develop the perfect solution for your application.
On request, we produce custom solutions starting from 1,000 pairs.

Request and order

Do you have any questions about our products or would like to have an non-binding offer? Then simply contact us now.
We'll be glad to help you!

Contact form

Single Extension PERFECT
Offset hanging tab

Installation Dimensions

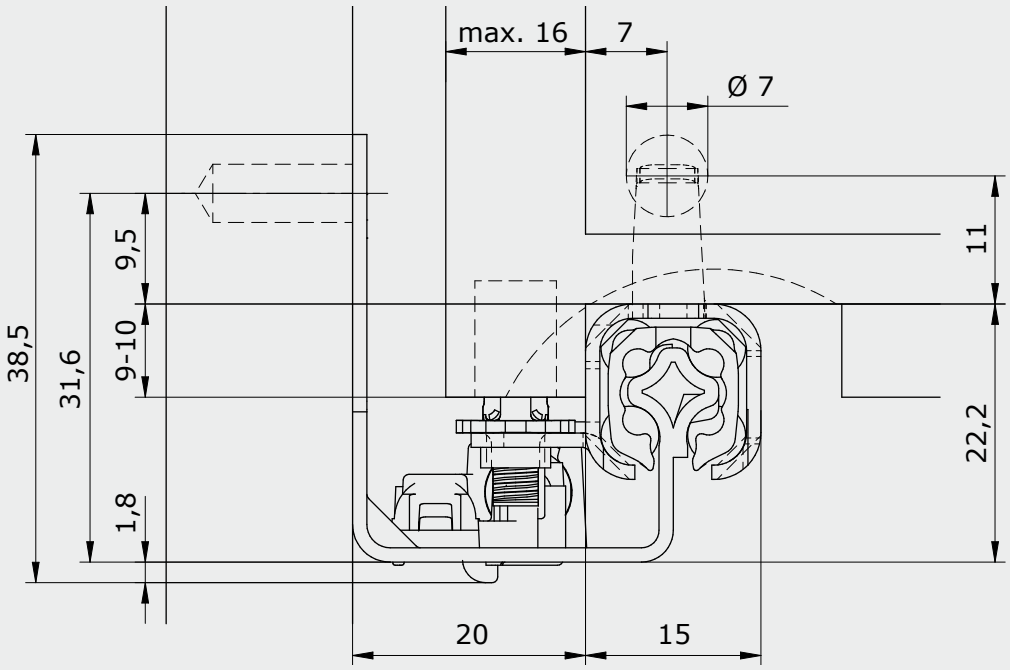

Features

- Star-shaped profile
- Loading capacity up to 25 kg
- Drawer lengths (Dimension C) from 250 to 500 mm
- Quick plug-on assembly of the drawer
- Stepless height adjustment
- High tracking stability with smooth running
- Perfect height and lateral stability
- Optionally with self-close, soft-close or Push-to-Open
- Optionally with 2D or 3D coupling
- Optionally with EB20 or EB23
- Optionally as stub version (without coupling)

Drillings and cut-outs

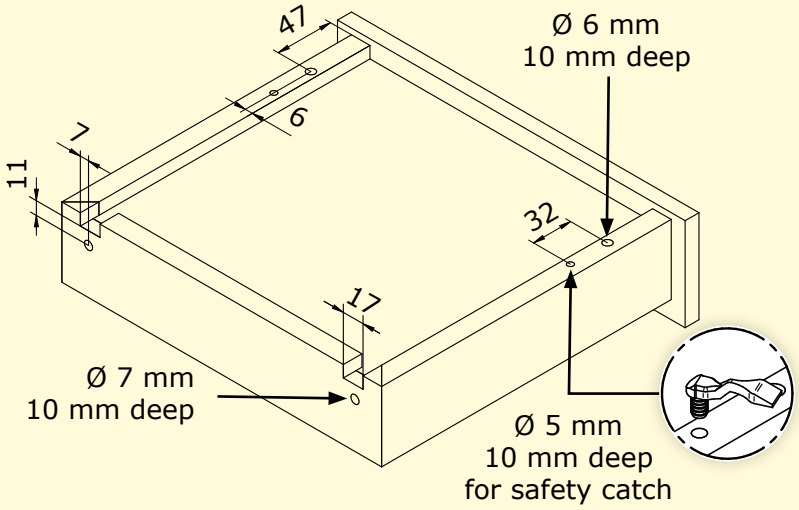



Length and hole pattern of the cabinet runner

Length cabinet runner A	214	246	278	310	342
Hole distance B	160	192	224	256	288

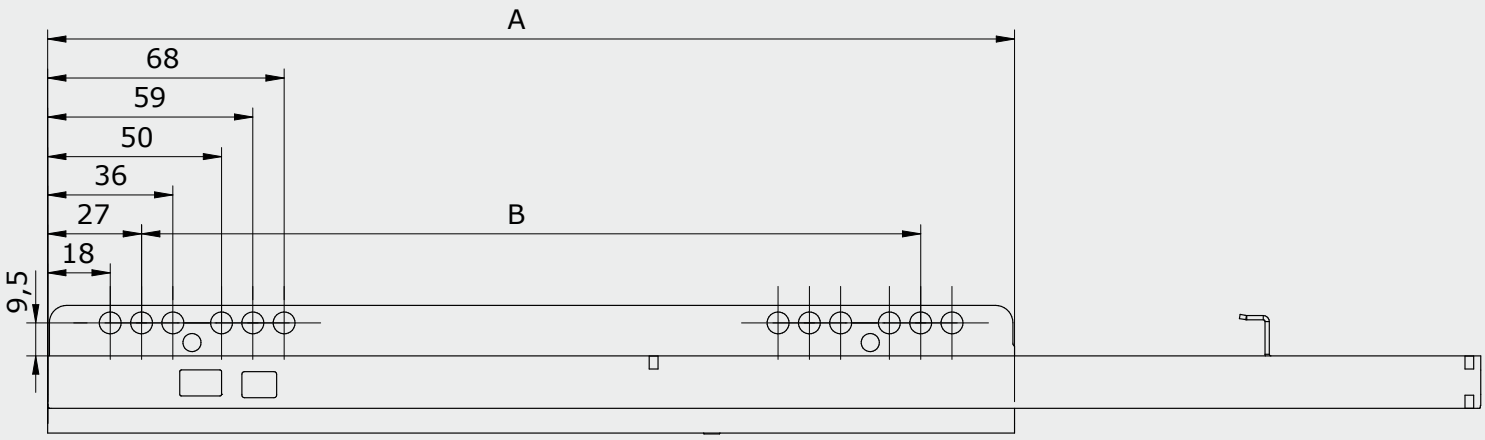

Drillings in the cabinet

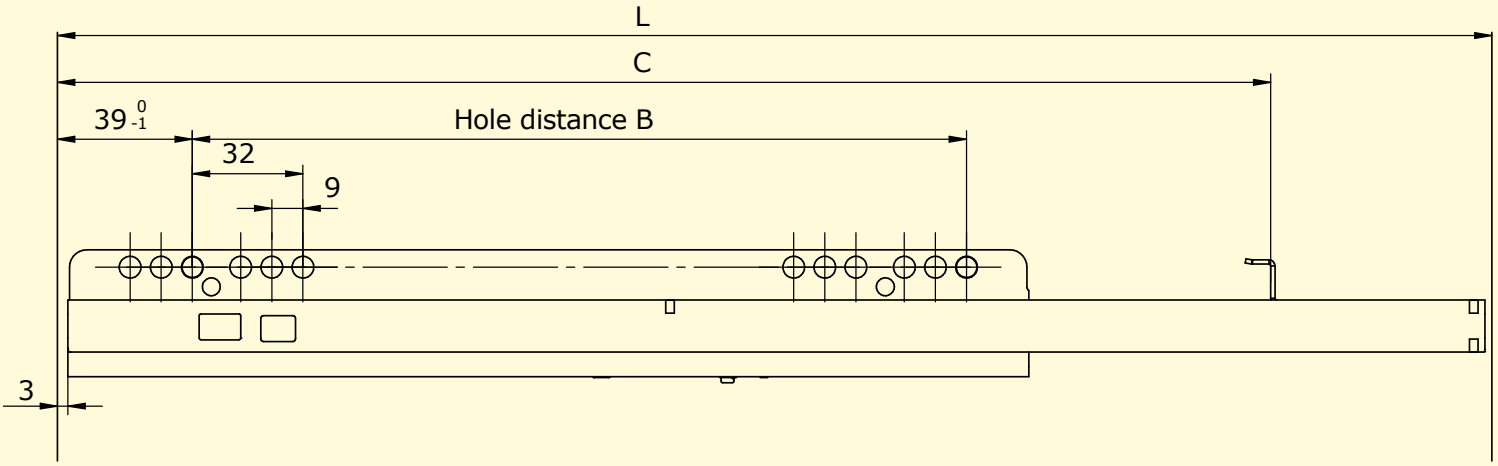

Dimensions for drawer and cabinet

Drawer length in mm (Dimension C)	250	300	350	400	450	500
Minimum cabinet depth in mm (Dimension L)	315	365	415	465	515	565

Single Extension PERFECT PEANUT®



Single Extension PERFECT PEANUT®

Soft-close _____ Page 38
Push-to-Open _____ Page 42

Product

The star-shaped geometry of the PERFECT PEANUT® single extension skilfully absorbs incorrect loads. The overlapping of the star-shaped area ensures high rigidity, which also has a positive effect on the running properties. The PEANUT® connection technology also allows the drawer runner to be **mounted without tools**. PERFECT PEANUT® fulfils all functional requirements for wooden drawers in living and sleeping areas. PERFECT PEANUT® is optionally available with soft-close and with push-to-open.

PEANUT® connection technology

The PEANUT® is an invisible connector which allows the PERFECT slide to be mounted quickly and easily without tools. The PEANUT® is made of reinforced glass fibre nylon, which ensures a high clamping force when inserted into the cabinet wall. The PEANUT® head is specifically designed to maximise ease of assembly and joint strength. The PERFECT concealed slides can thus be installed quickly, easily and without tools.

Single Extension PERFECT PEANUT®

Soft-close and plug-on assembly

Installation Dimensions

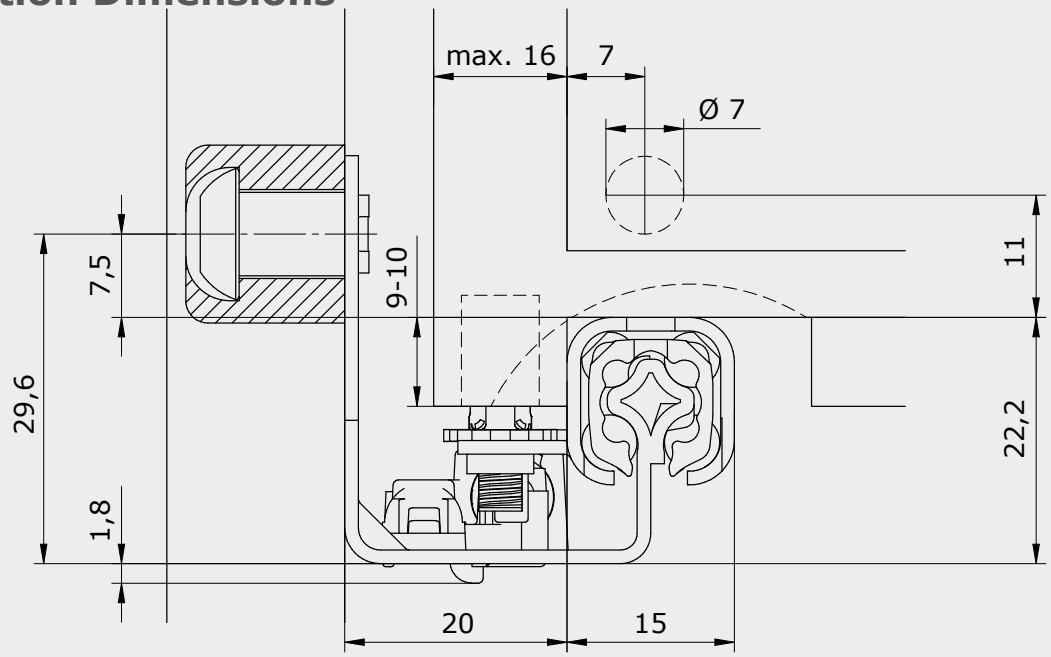

Features

- Star-shaped profile
- Loading capacity up to 25 kg
- Lengths from 250 to 550 mm
- Quick plug-on assembly of the drawer
- Stepless height adjustment
- High tracking stability with smooth running
- Perfect height and lateral stability
- With PEANUT® connecting fittings
- Quick and easy assembly
- With soft-close

Drillings and cut-outs

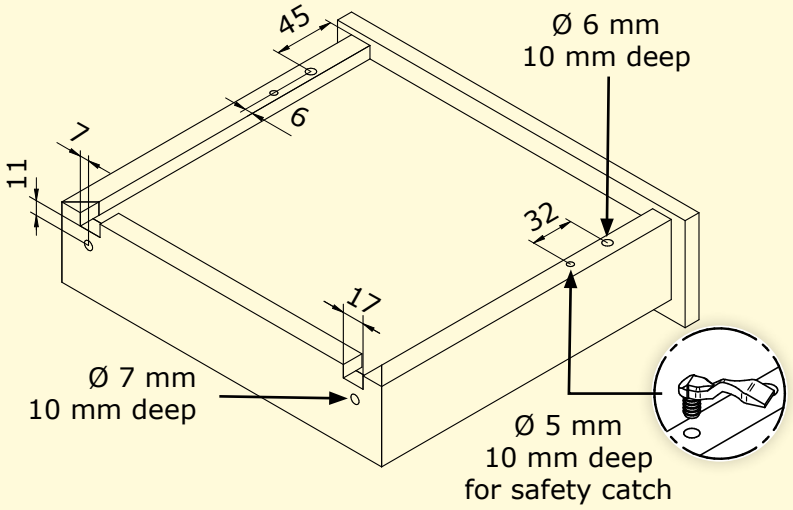

Drawer length in mm	Cabinet runner in mm	Drawer runner in mm	Soft-close	Runners/Box	Boxes/Pallet maximum
250	214	260	x	30	45
300	246	310	x	30	35
350	246	360	x	30	35
400	278	410	x	24	42
450	310	460	x	24	42
500	342	510	x	24	30
550	342	560	x	24	30

Length and hole pattern of the cabinet runner

Length cabinet runner A	214	246	278	310	342
Peanut hole distance B	128	160	192	224	256

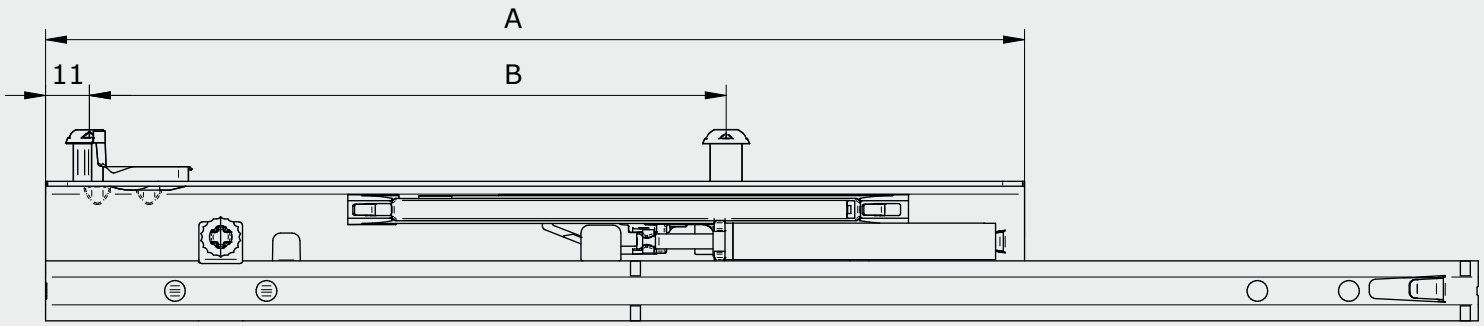

Milling in the cabinet

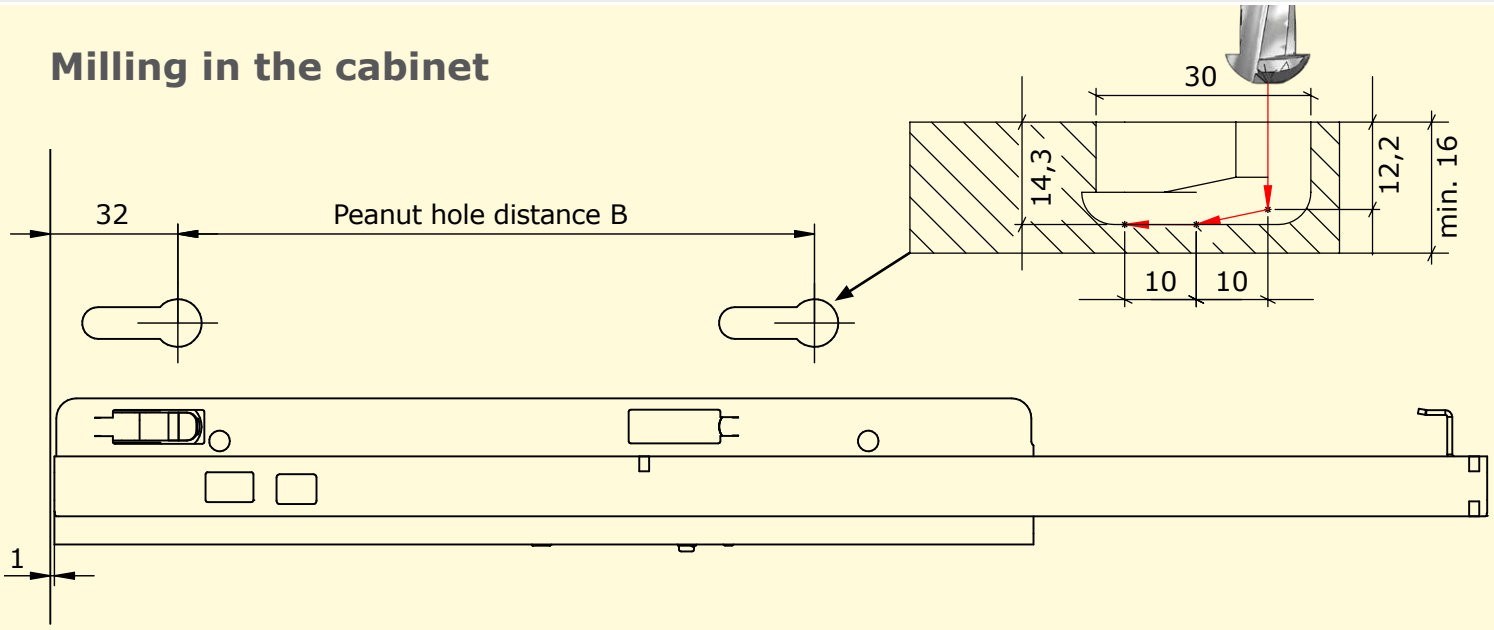

Pieces/Pallet maximum	Weight/Pallet maximum	Order number left side	Order number right side
1350	468	3212502019000	3222502019000
1050	421	3213002019000	3223002019000
1050	443	3213502019000	3223502019000
1008	489	3214002019000	3224002019000
1008	542	3214502019000	3224502019000
720	420	3215002019000	3225002019000
720	435	3215502019000	3225502019000

Single Extension PERFECT PEANUT®
Soft-close and coupling

Installation Dimensions

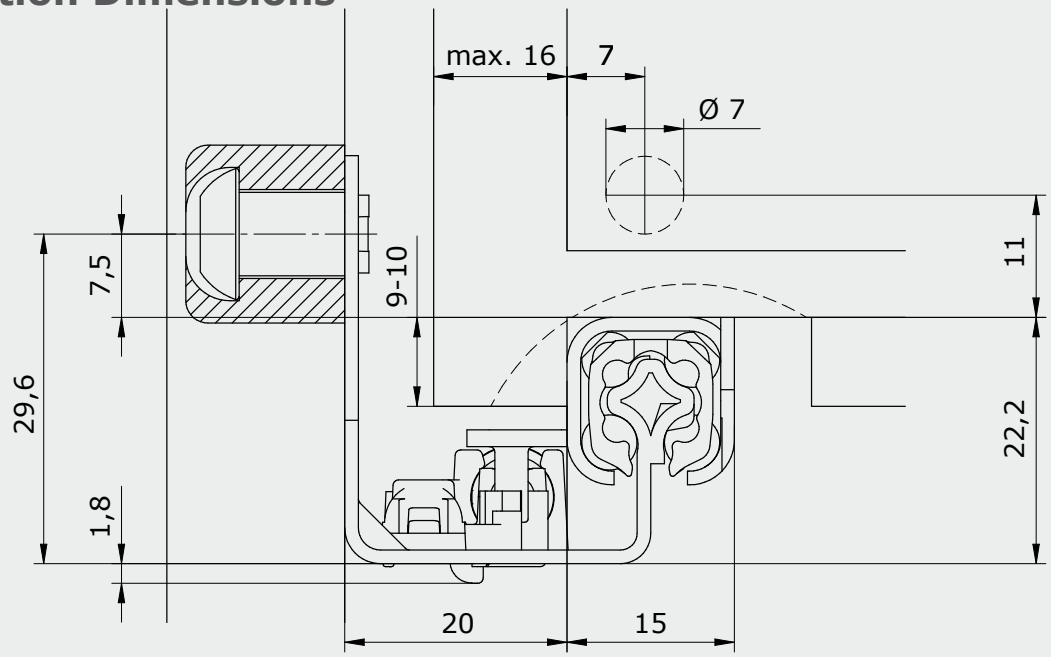

Features

- Star-shaped profile
- Loading capacity up to 25 kg
- Lengths from 250 to 550 mm
- Stepless height adjustment
- High tracking stability with smooth running
- Perfect height and lateral stability
- With PEANUT® connecting fittings
- Quick and easy assembly of the drawer
- With soft-close
- Optionally with 2D or 3D coupling

Coupling technology

With the different coupling options, drawers can be installed and removed in no time. The system combines pull-out protection, coupling and adjustment in a single component. Available in either a 2D version (height and side adjustment) or a 3D version (height, side and depth adjustment). This allows precise and uniform gap alignment to be achieved quickly, easily and without tools.

2D



3D



Drawer length in mm	Cabinet runner in mm	Drawer runner in mm	Soft-close	Runners/Box	Boxes/Pallet maximum
250	214	260	x	30	45
300	246	310	x	30	35
350	246	360	x	30	35
400	278	410	x	24	42
450	310	460	x	24	42
500	342	510	x	24	30
550	342	560	x	24	30

Length and hole pattern of the cabinet runner

Length cabinet runner A	214	246	278	310	342
Peanut hole distance B	128	160	192	224	256

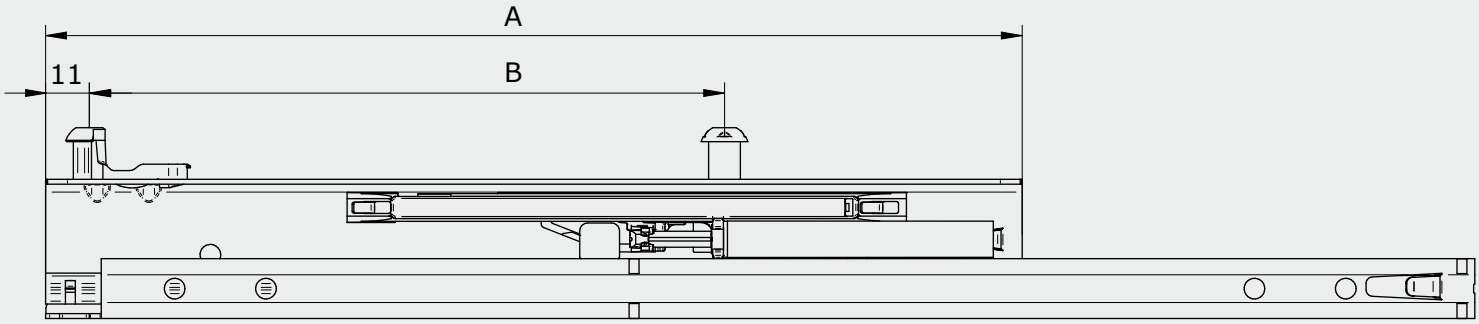

Milling in the cabinet

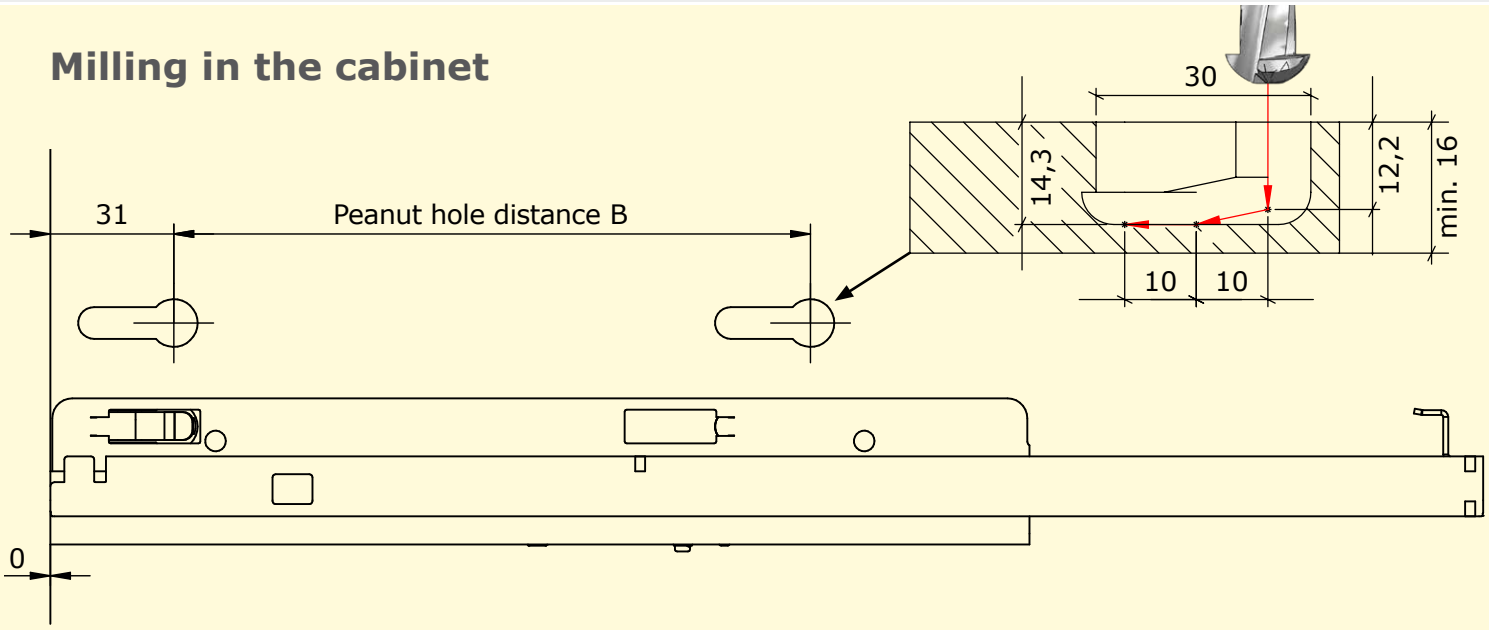

Pieces/Pallet maximum	Weight/Pallet maximum	Order number left side	Order number right side
1350	468	3212502019200	3222502019100
1050	421	3213002019200	3223002019100
1050	443	3213502019200	3223502019100
1008	489	3214002019200	3224002019100
1008	542	3214502019200	3224502019100
720	420	3215002019200	3225002019100
720	435	3215502019200	3225502019100

Single Extension PERFECT PEANUT®

Push-to-Open and plug-on assembly

Installation Dimensions

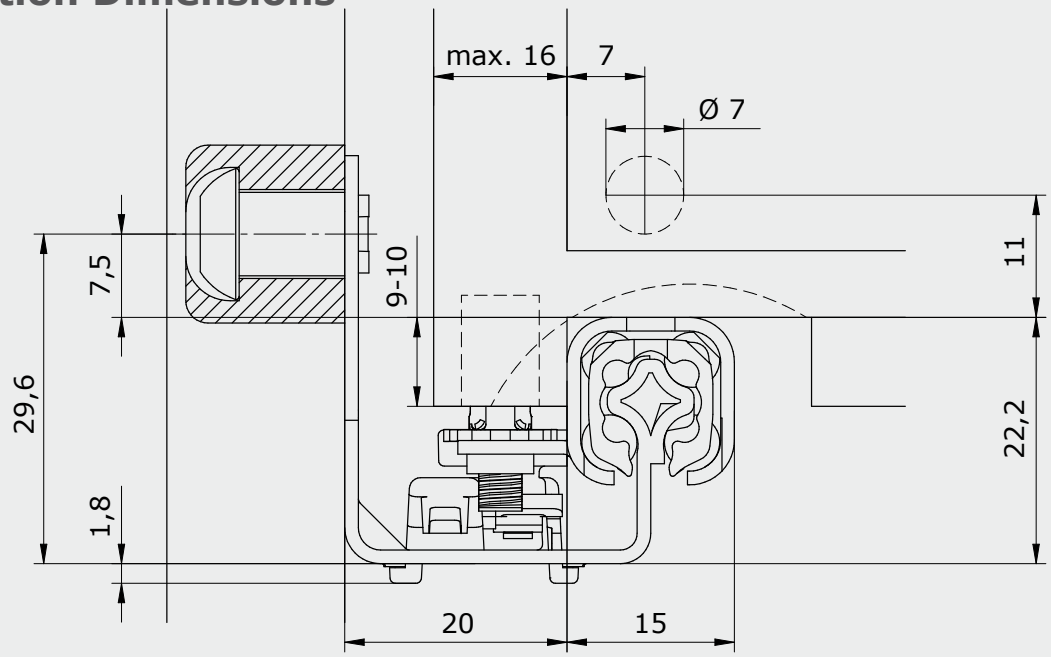

Features

- Star-shaped profile
- Loading capacity up to 25 kg
- Lengths from 250 to 550 mm
- Quick plug-on assembly of the drawer
- Stepless height adjustment
- High tracking stability with smooth running
- Perfect height and lateral stability
- With PEANUT® connecting fittings
- Quick and easy assembly
- Trigger path/reveal gap = 3 mm
- With push-to-open

Drillings and cut-outs

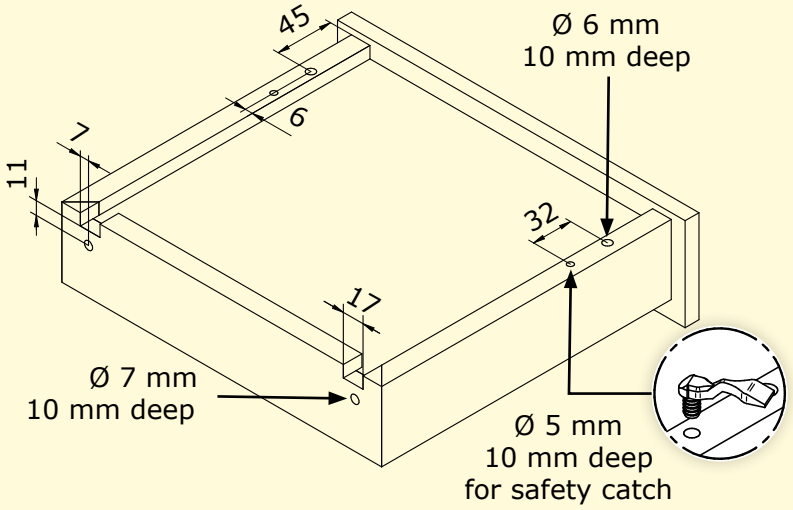

Drawer length in mm	Cabinet runner in mm	Drawer runner in mm	Push-to-Open	Runners/Box	Boxes/Pallet maximum
250	214	260	x	30	45
300	246	310	x	30	35
350	246	360	x	30	35
400	278	410	x	24	42
450	310	460	x	24	42
500	342	510	x	24	30
550	342	560	x	24	30

Length and hole pattern of the cabinet runner

Length cabinet runner A	214	246	278	310	342
Peanut hole distance B	128	160	192	224	256

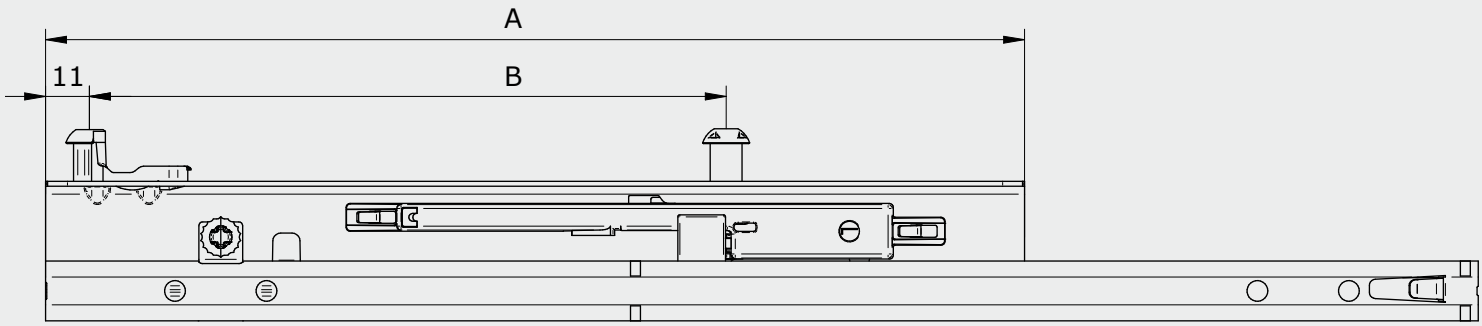

Milling in the cabinet

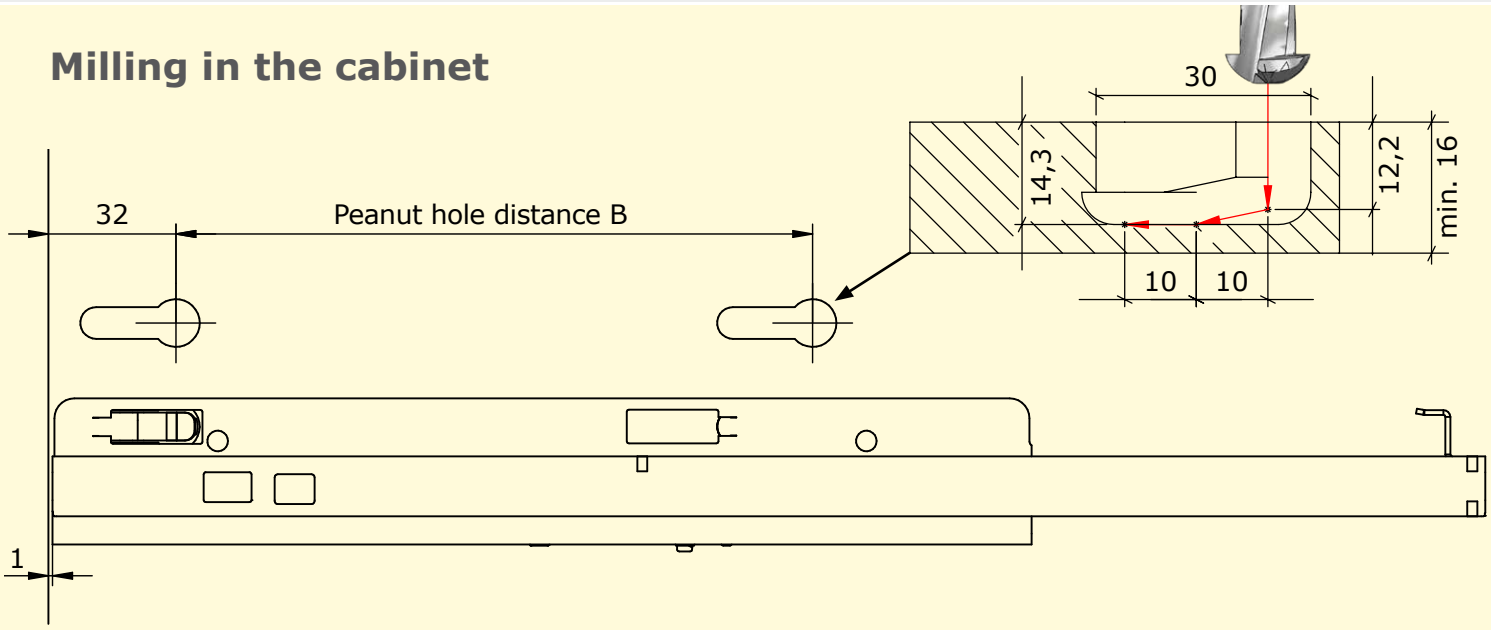

Pieces/Pallet maximum	Weight/Pallet maximum	Order number left side	Order number right side
1350	468	3212503009000	3222503009000
1050	421	3213003009000	3223003009000
1050	443	3213503009000	3223503009000
1008	489	3214003009000	3224003009000
1008	542	3214503009000	3224503009000
720	420	3215003009000	3225003009000
720	435	3215503009000	3225503009000

Single Extension PERFECT EB23



Single Extension PERFECT EB23

Soft-close _____ Page 46
Push-to-Open _____ Page 52
Peanut® _____ Page 56

Product

The star-shaped geometry of the PERFECT single extension skilfully absorbs incorrect loads. The overlapping of the star-shaped area ensures a high rigidity, which also has a positive effect on the running properties. PERFECT therefore fulfils all functional requirements for wooden drawers in living and sleeping areas. The PERFECT single extension is available either as a fully-fledged standard version or as a shortened stub version.

Variants

The PERFECT single extension runner is available with soft-close or with push-to-open. The following options are available for attaching and detaching drawers: Plug-on assembly, 1D coupling and 2D coupling. The PERFECT single extension runner offers a safety-catch for drawer locking.

Single Extension PERFECT EB23

Soft-close and plug-on assembly

Installation Dimensions

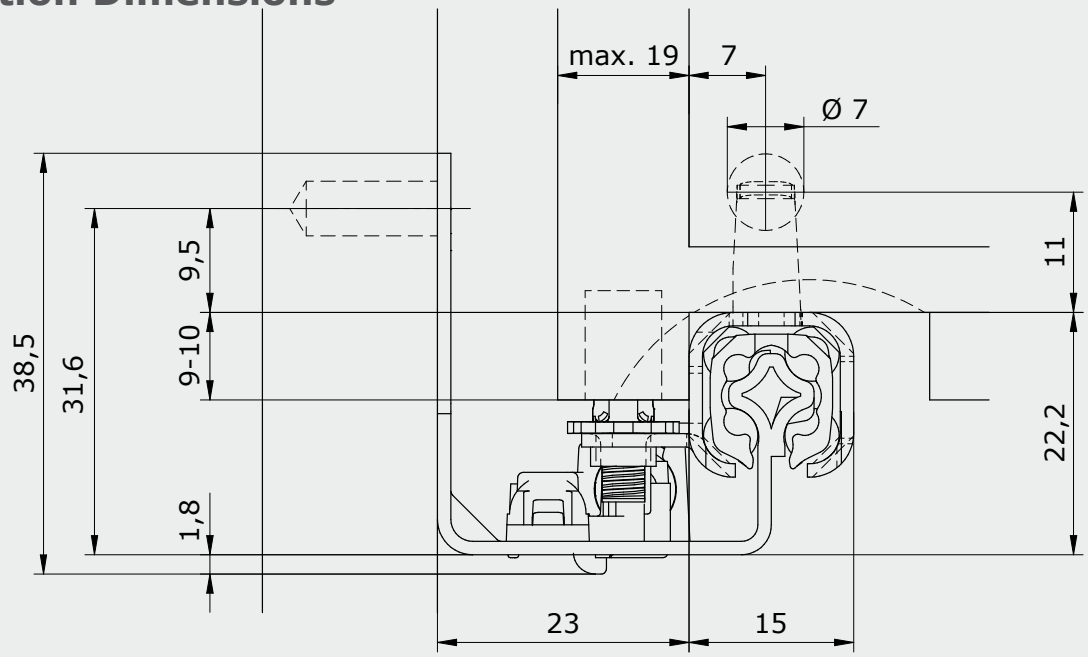

Features

- Star-shaped profile
- Loading capacity up to 25 kg
- Lengths from 250 to 550 mm
- Quick plug-on assembly of the drawer
- Stepless height adjustment
- High tracking stability with smooth running
- Perfect height and lateral stability
- Installation width 23 mm (≤ 19 mm)
- With soft-close

Drillings and cut-outs

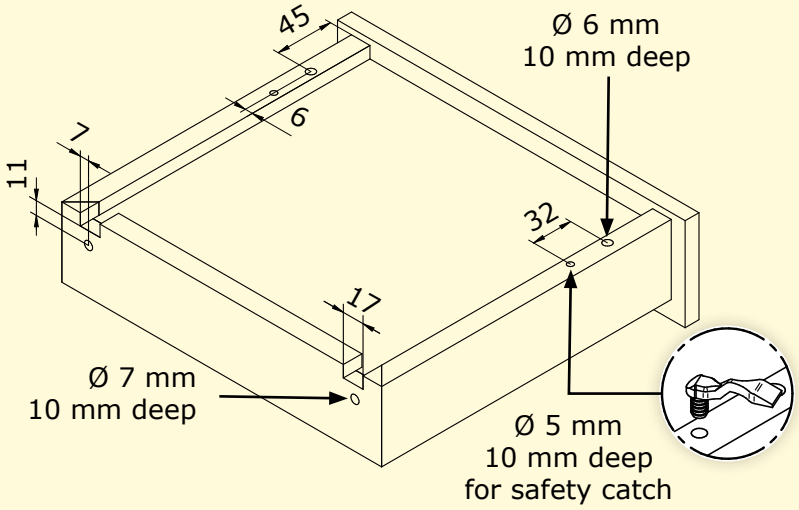

Drawer length in mm	Cabinet runner in mm	Drawer runner in mm	Soft-close	Runners/Box	Boxes/Pallet maximum
250	214	260	x	40	45
300	246	310	x	40	35
350	246	360	x	40	35
400	278	410	x	32	42
450	310	460	x	32	42
500	342	510	x	32	30
550	342	560	x	32	30

Length and hole pattern of the cabinet runner

Length cabinet runner A	214	246	278	310	342
Hole distance B	160	192	224	256	288

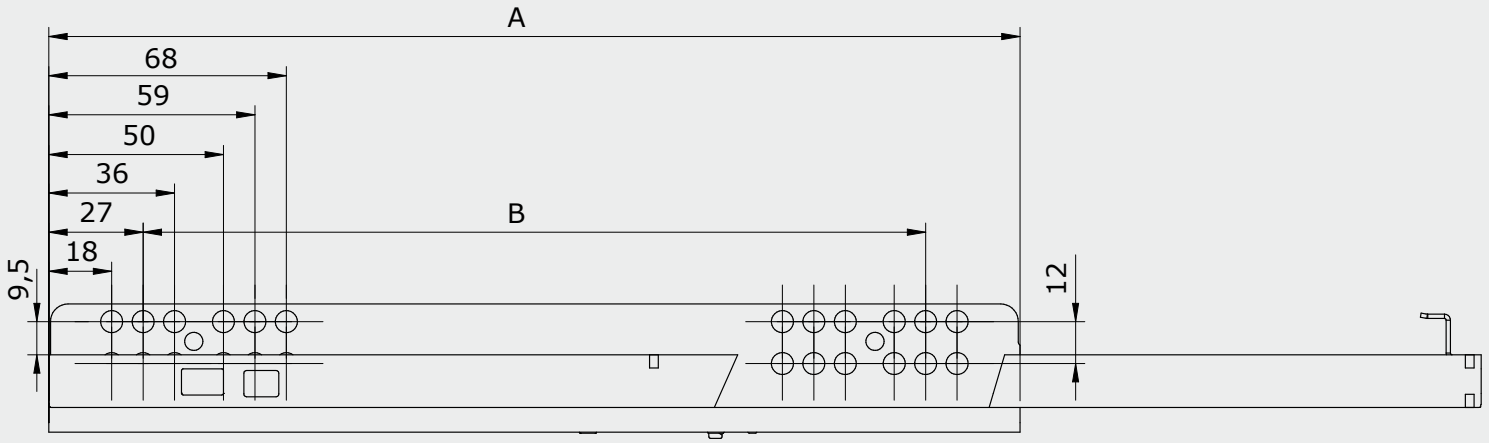

Drillings in the cabinet

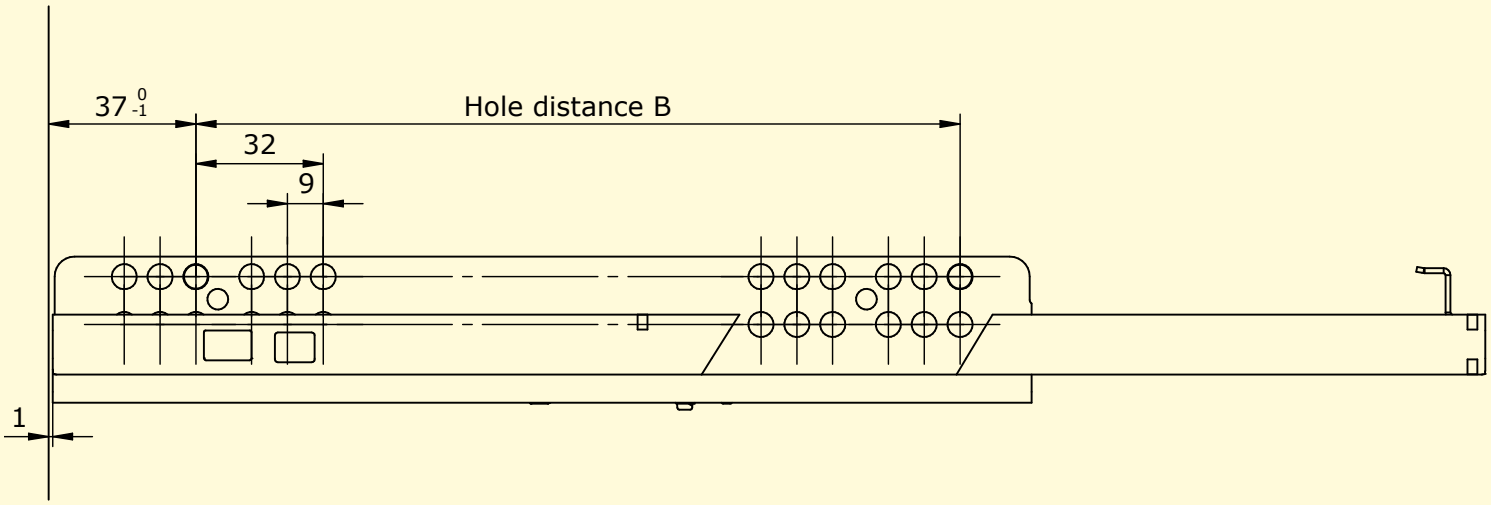

Pieces/Pallet maximum	Weight/Pallet maximum	Order number left side	Order number right side
1800	610	3612502011500	3622502011500
1400	551	3613002011500	3623002011500
1400	580	3613502011500	3623502011500
1344	625	3614002011500	3624002011500
1344	698	3614502011500	3624502011500
960	553	3615002011500	3625002011500
960	573	3615502011500	3625502011500

Single Extension PERFECT EB23

Stub, soft-close and plug-on assembly

Installation Dimensions

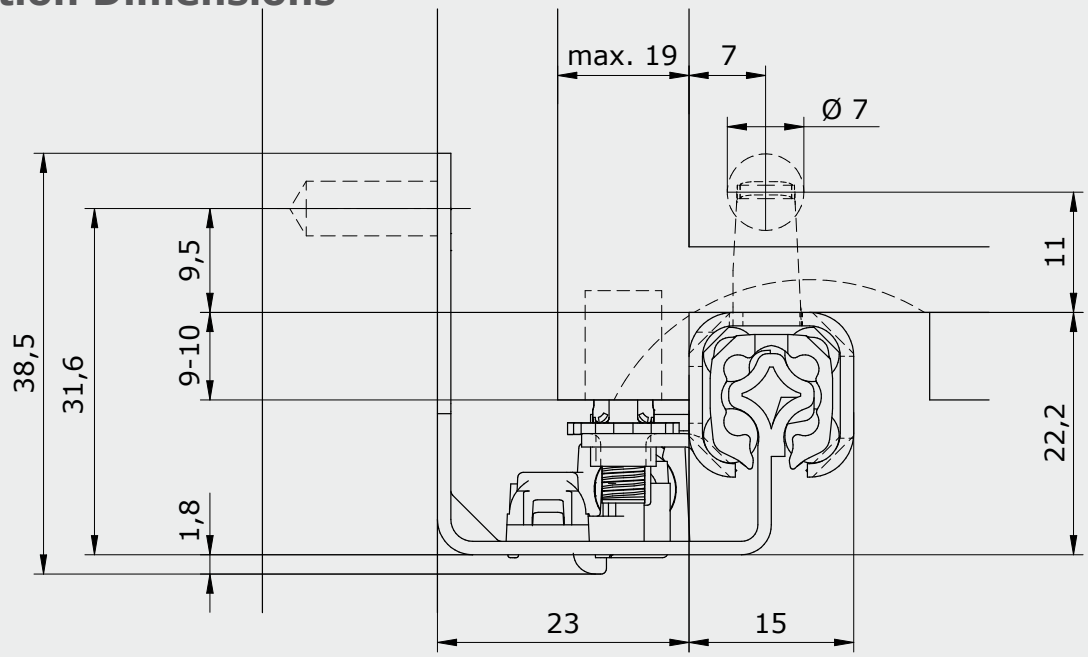

Features

- Star-shaped profile
- Loading capacity up to 25 kg
- Lengths from 250 to 550 mm
- Quick plug-on assembly of the drawer
- Stepless height adjustment
- High tracking stability with smooth running
- Perfect height and lateral stability
- Installation width 23 mm (≤ 19 mm)
- With soft-close
- Stub version

Drillings and cut-outs

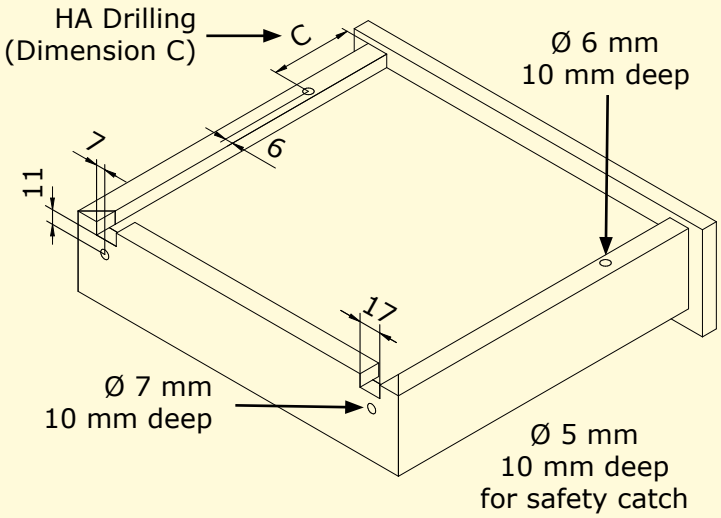

Drawer length in mm	Cabinet runner in mm	Drawer runner in mm	HA Drilling (Dimension C)	Soft-close	Runners/Box
250	214	220,5	61,5	x	40
300	246	220,5	111,5	x	40
350	246	253,5	128,5	x	40
400	278	281,5	150,5	x	32
450	310	315,5	166,5	x	32
500	342	341,5	190,5	x	32
550	342	370,5	211,5	x	32

Length and hole pattern of the cabinet runner

Length cabinet runner A	214	246	278	310	342
Hole distance B	160	192	224	256	288

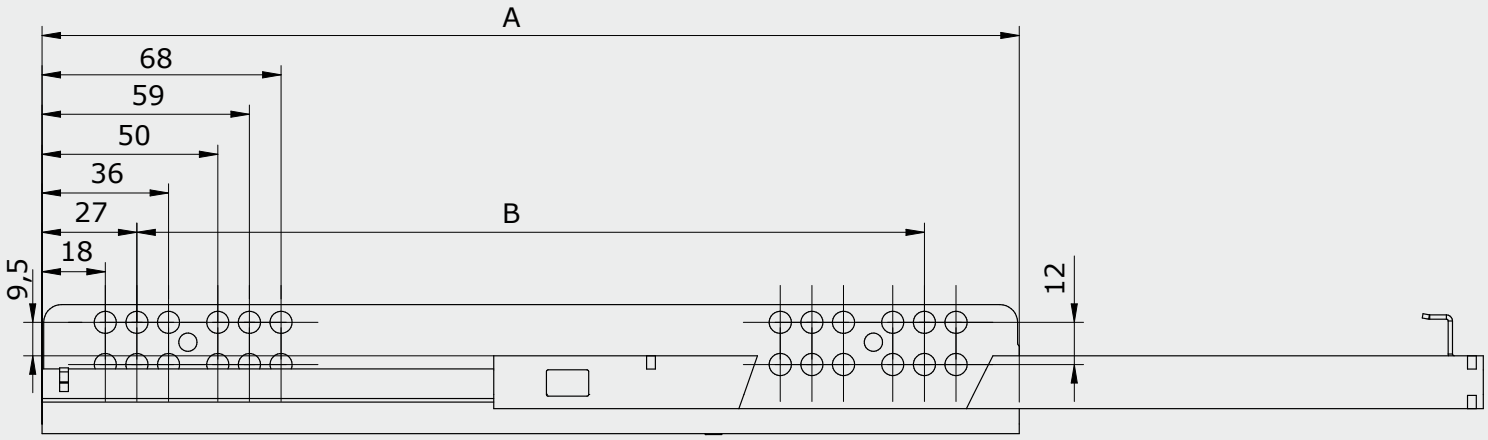

Drillings in the cabinet

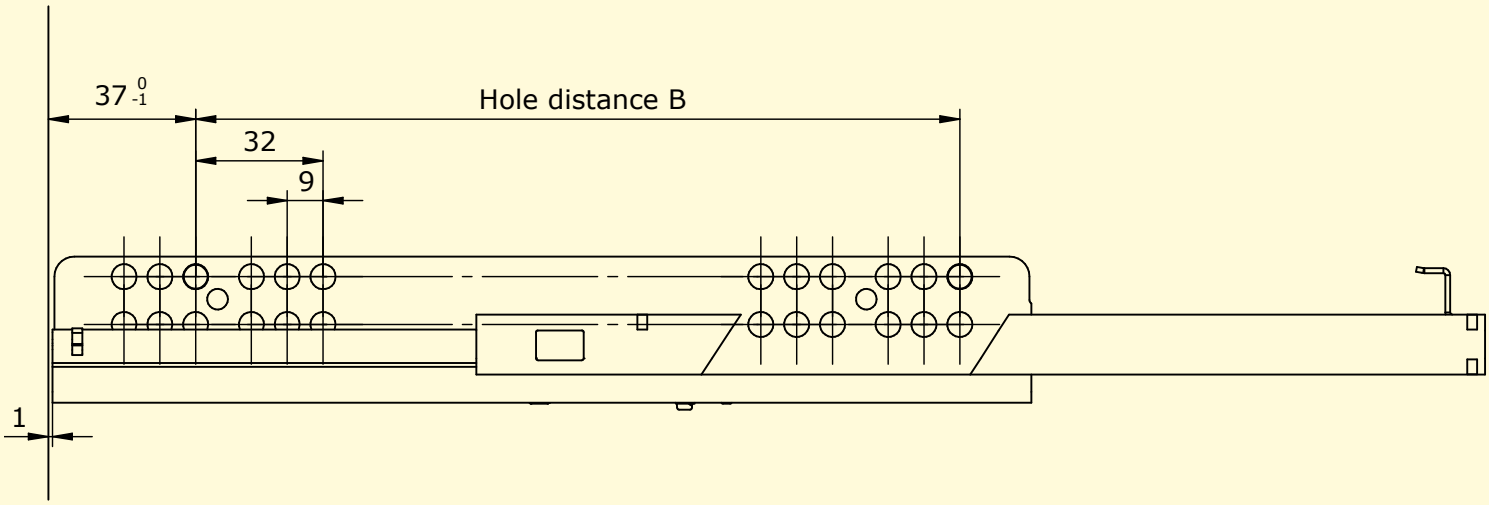

Boxes/Pallet maximum	Pieces/Pallet maximum	Weight/Pallet maximum	Order number left side	Order number right side
45	1800	584	3612502031500	3622502031500
35	1400	499	3613002031500	3623002031500
35	1400	519	3613502031500	3623502031500
42	1344	554	3614002031500	3624002031500
42	1344	520	3614502031500	3624502031500
30	960	487	3615002031500	3625002031500
30	960	499	3615502031500	3625502031500

Single Extension PERFECT EB23
Soft-close and coupling

Installation Dimensions

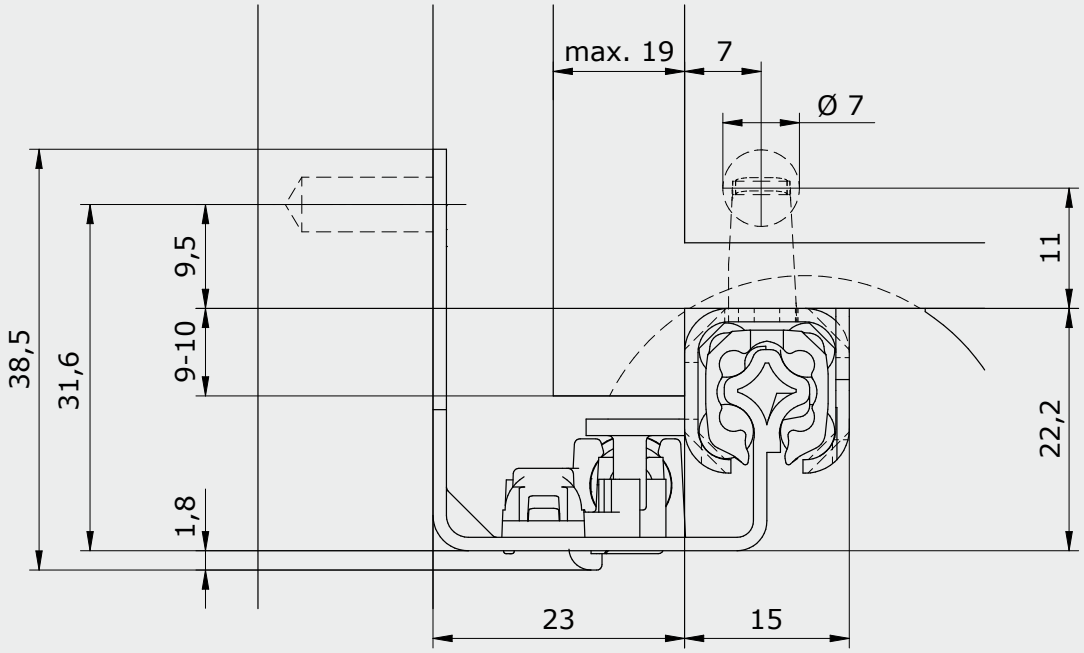

Features

- Star-shaped profile
- Loading capacity up to 25 kg
- Lengths from 250 to 550 mm
- Stepless height adjustment
- High tracking stability with smooth running
- Perfect height and lateral stability
- Installation width 23 mm (≤ 19 mm)
- With soft-close
- Optionally with 2D or 3D coupling

Coupling technology

With the different coupling options, drawers can be installed and removed in no time. The system combines pull-out protection, coupling and adjustment in a single component. Available in either a 2D version (height and side adjustment) or a 3D version (height, side and depth adjustment). This allows precise and uniform gap alignment to be achieved quickly, easily and without tools.

2D



3D



Drawer length in mm	Cabinet runner in mm	Drawer runner in mm	Soft-close	Runners/Box	Boxes/Pallet maximum
250	214	260	x	40	45
300	246	310	x	40	35
350	246	360	x	40	35
400	278	410	x	32	42
450	310	460	x	32	42
500	342	510	x	32	30
550	342	560	x	32	30

Length and hole pattern of the cabinet runner

Length cabinet runner A	214	246	278	310	342
Hole distance B	160	192	224	256	288

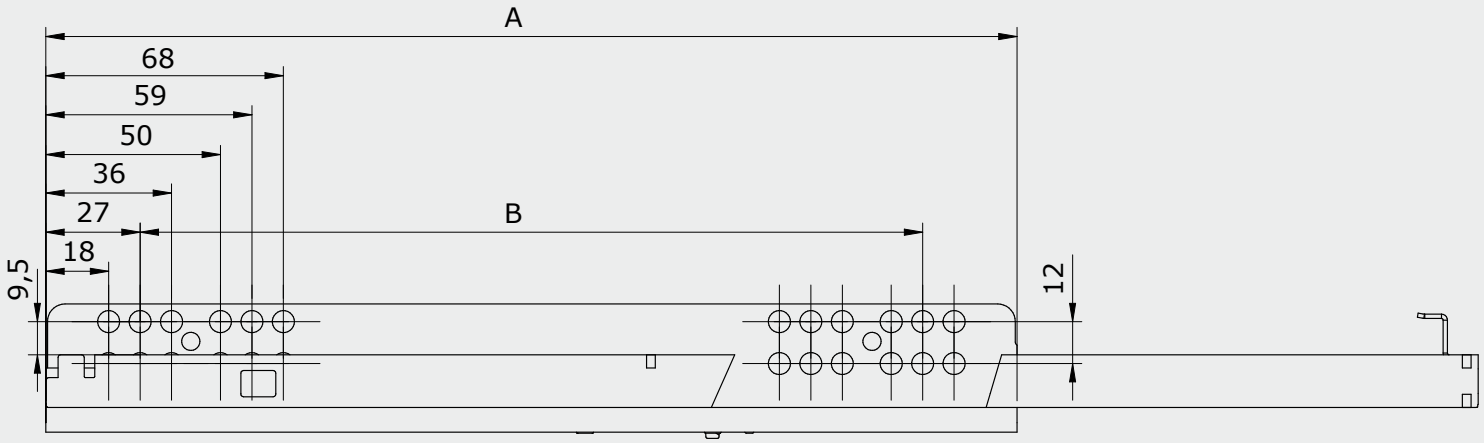

Drillings in the cabinet

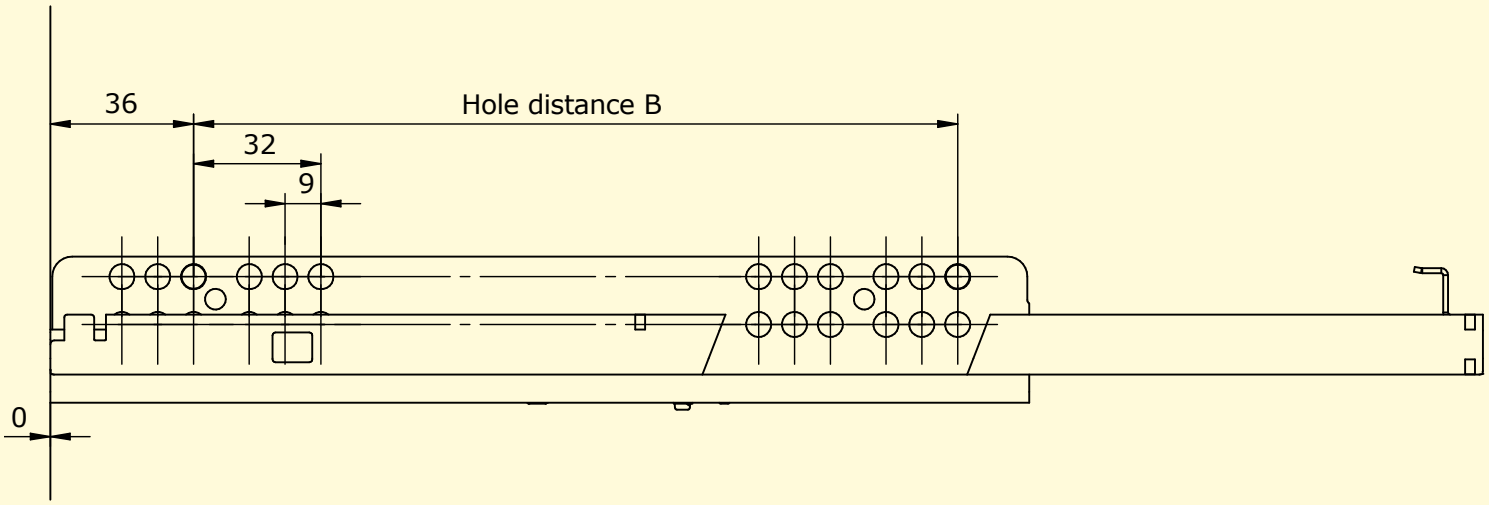

Pieces/Pallet maximum	Weight/Pallet maximum	Order number left side	Order number right side
1800	602	3612502011100	3622502011000
1400	542	3613002011100	3623002011000
1400	572	3613502011100	3623502011000
1344	618	3614002011100	3624002011000
1344	692	3614502011100	3624502011000
960	548	3615002011100	3625002011000
960	568	3615502011100	3625502011000

Single Extension PERFECT EB23

Push-to-Open and plug-on assembly

Installation Dimensions

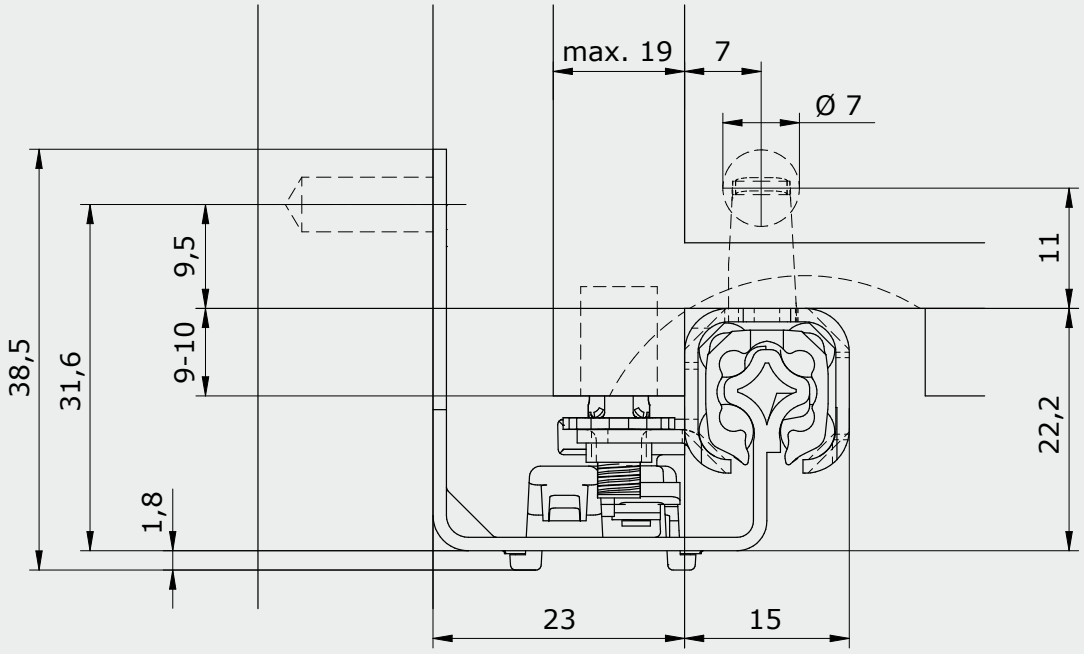

Features

- Star-shaped profile
- Loading capacity up to 25 kg
- Lengths from 250 to 550 mm
- Quick plug-on assembly of the drawer
- Stepless height adjustment
- High tracking stability with smooth running
- Perfect height and lateral stability
- Installation width 23 mm (≤ 19 mm)
- Trigger path/reveal gap = 3 mm
- With push-to-open

Drillings and cut-outs

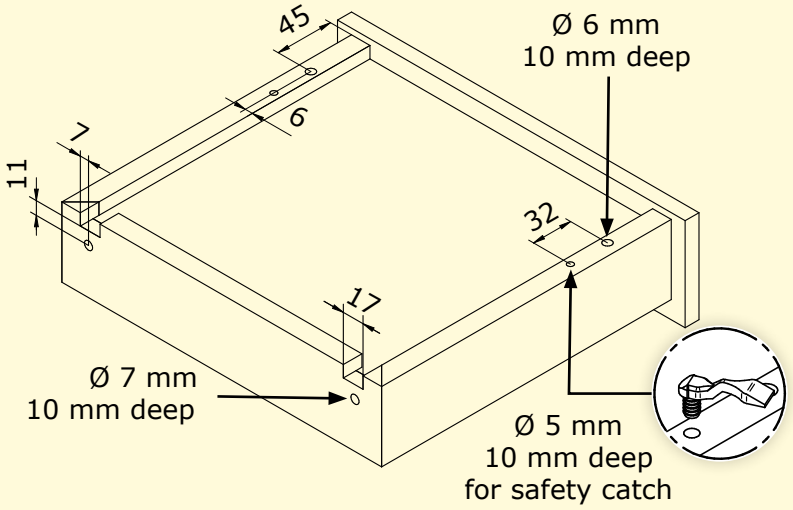

Drawer length in mm	Cabinet runner in mm	Drawer runner in mm	Push-to-Open	Runners/Box	Boxes/Pallet maximum
250	214	260	x	40	45
300	246	310	x	40	35
350	246	360	x	40	35
400	278	410	x	32	42
450	310	460	x	32	42
500	342	510	x	32	30
550	342	560	x	32	30

Length and hole pattern of the cabinet runner

Length cabinet runner A	214	246	278	310	342
Hole distance B	160	192	224	256	288

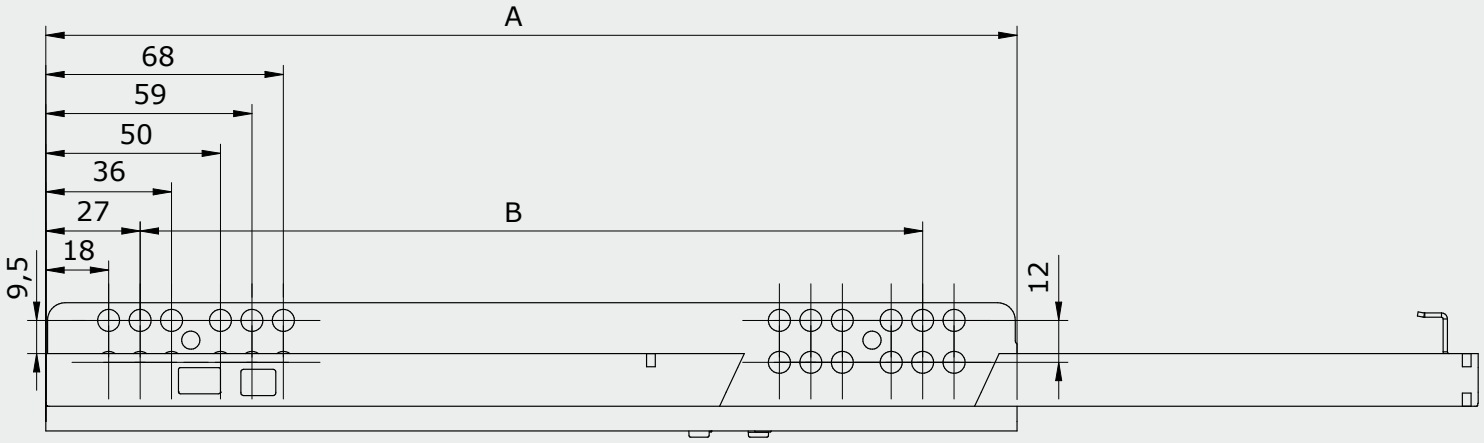

Drillings in the cabinet

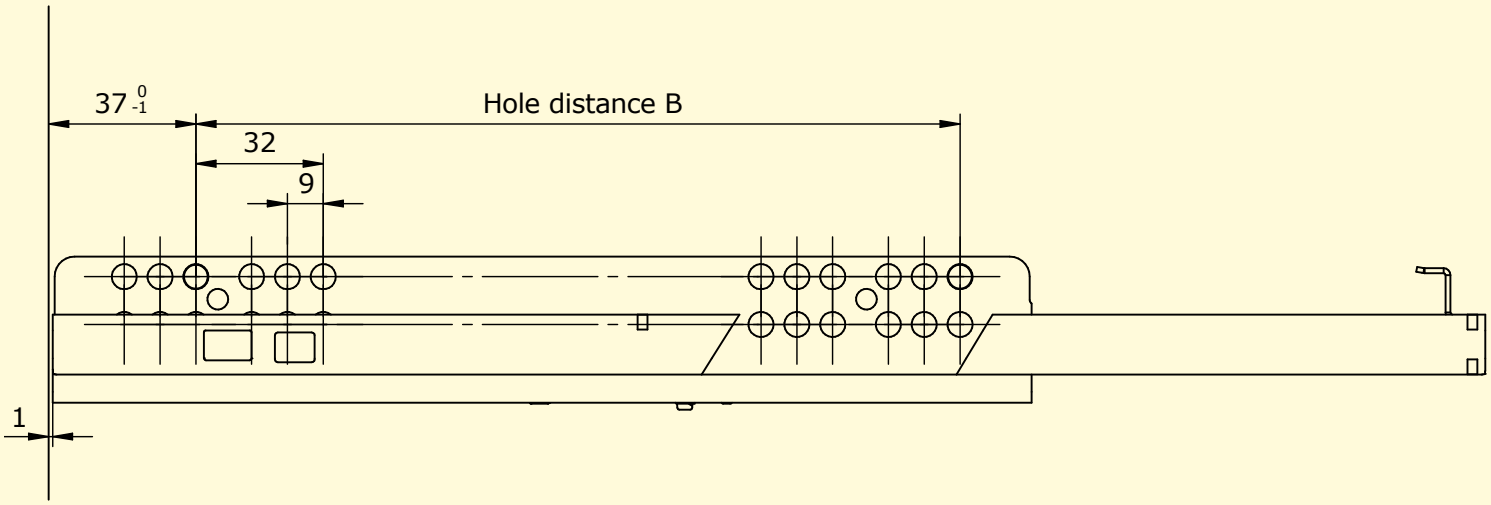

Pieces/Pallet maximum	Weight/Pallet maximum	Order number left side	Order number right side
1800	580	3612503001500	3622503001500
1400	527	3613003001500	3623003001500
1400	556	3613503001500	3623503001500
1344	602	3614003001500	3624003001500
1344	674	3614503001500	3624503001500
960	537	3615003001500	3625003001500
960	558	3615503001500	3625503001500

Single Extension PERFECT EB23
Push-to-Open and coupling

Installation Dimensions

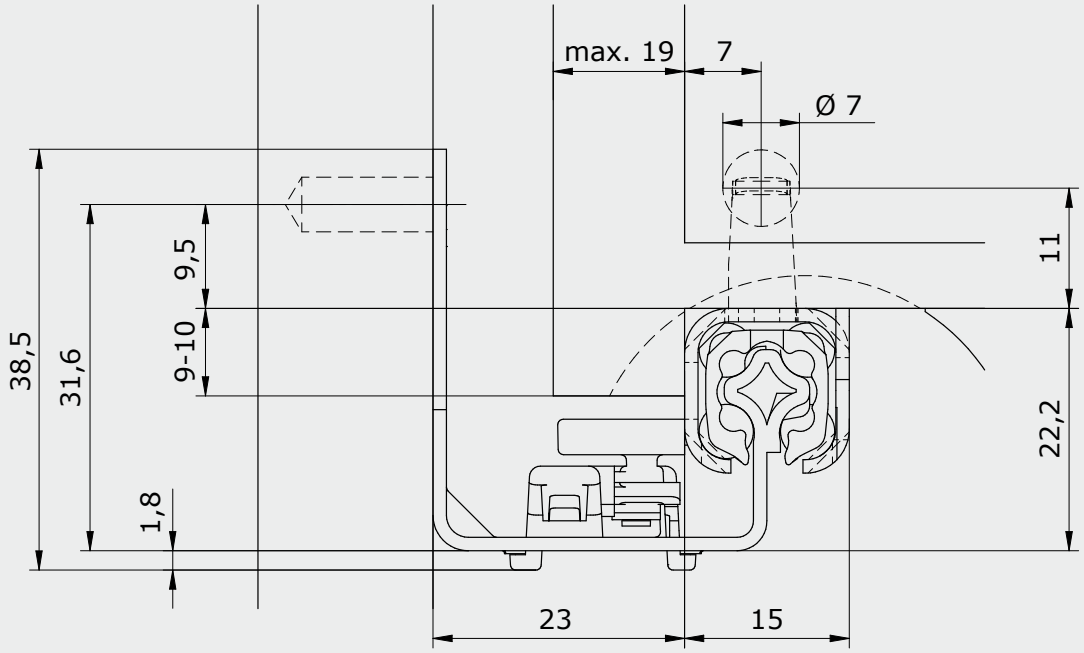

Features

- Star-shaped profile
- Loading capacity up to 25 kg
- Lengths from 250 to 550 mm
- Stepless height adjustment
- High tracking stability with smooth running
- Perfect height and lateral stability
- Installation width 23 mm (≤ 19 mm)
- Trigger path/reveal gap = 3 mm
- With push-to-open
- Optionally with 2D or 3D coupling

Coupling technology

With the different coupling options, drawers can be installed and removed in no time. The system combines pull-out protection, coupling and adjustment in a single component. Available in either a 2D version (height and side adjustment) or a 3D version (height, side and depth adjustment). This allows precise and uniform gap alignment to be achieved quickly, easily and without tools.

2D



3D



Drawer length in mm	Cabinet runner in mm	Drawer runner in mm	Push-to-Open	Runners/Box	Boxes/Pallet maximum
250	214	260	x	40	45
300	246	310	x	40	35
350	246	360	x	40	35
400	278	410	x	32	42
450	310	460	x	32	42
500	342	510	x	32	30
550	342	560	x	32	30

Length and hole pattern of the cabinet runner

Length cabinet runner A	214	246	278	310	342
Hole distance B	160	192	224	256	288

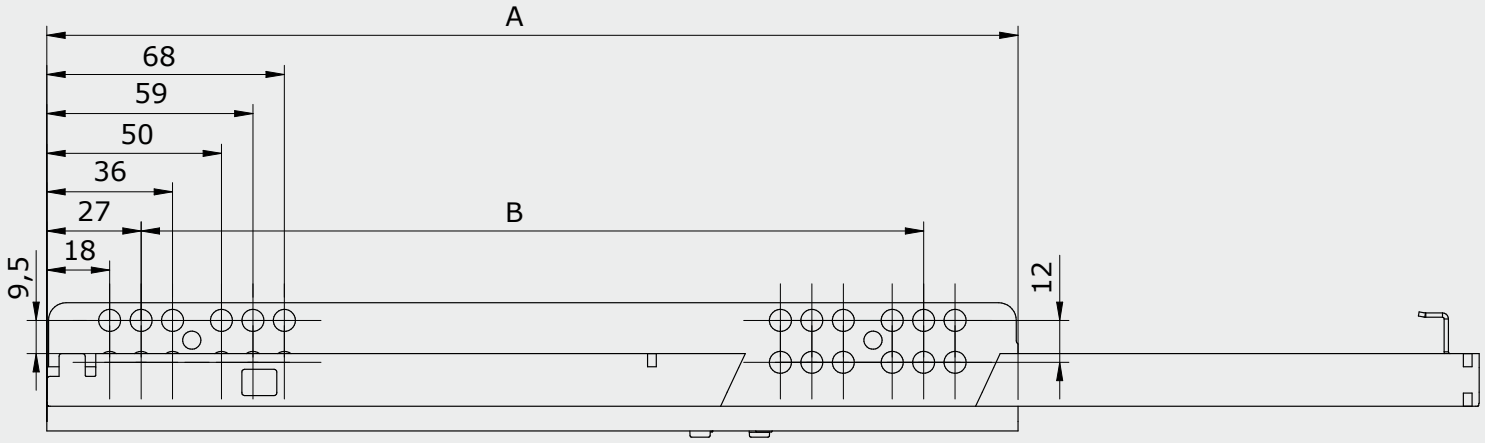

Drillings in the cabinet

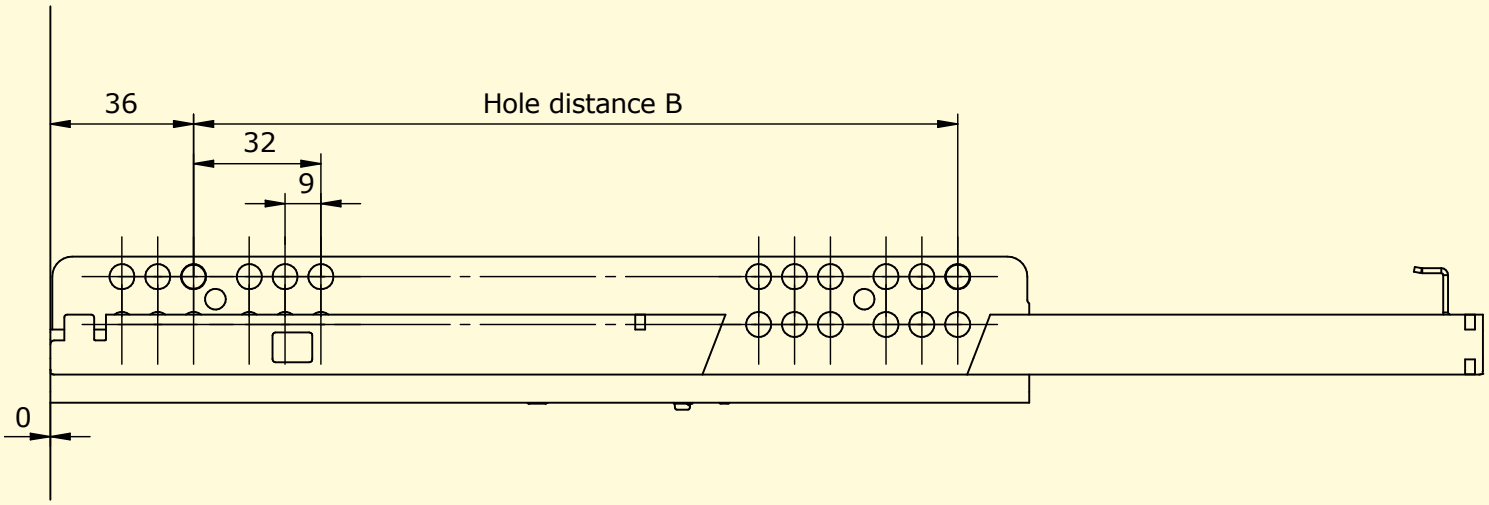

Pieces/Pallet maximum	Weight/Pallet maximum	Order number left side	Order number right side
1800	570	3612503001100	3622503001000
1400	518	3613003001100	3623003001000
1400	547	3613503001100	3623503001000
1344	594	3614003001100	3624003001000
1344	667	3614503001100	3624503001000
960	529	3615003001100	3625003001000
960	552	3615503001100	3625503001000

Single Extension PERFECT EB23

Soft-close and plug-on assembly

Installation Dimensions

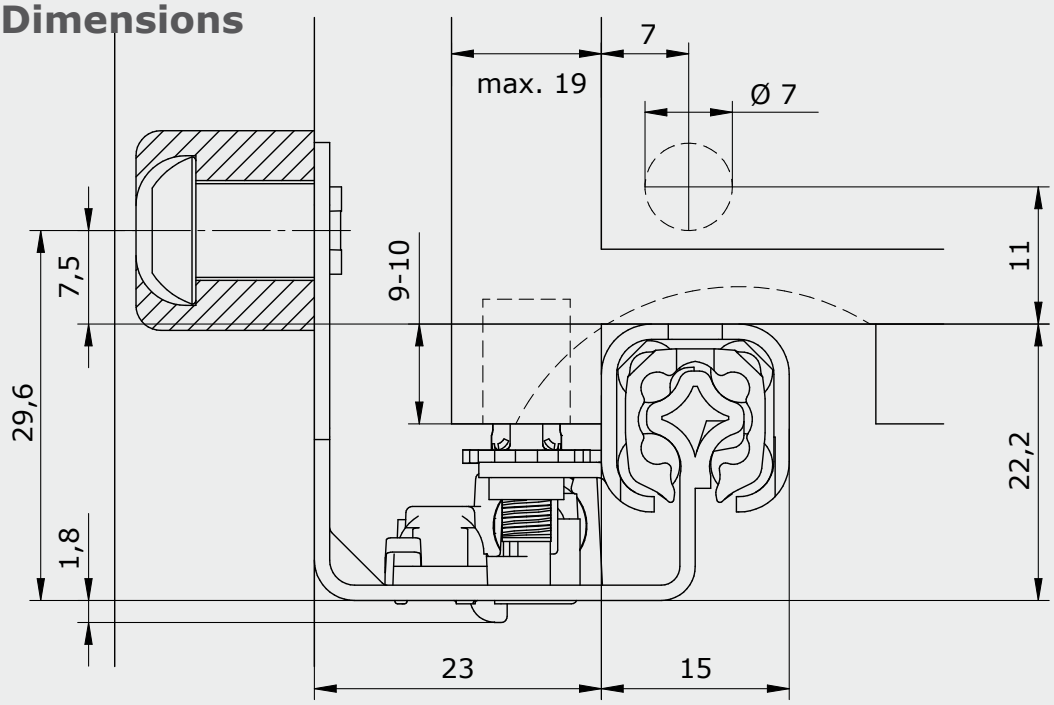

Features

- Star-shaped profile
- Loading capacity up to 25 kg
- Lengths from 250 to 550 mm
- Quick plug-on assembly of the drawer
- Stepless height adjustment
- High tracking stability with smooth running
- Perfect height and lateral stability
- Installation width 23 mm (≤ 19 mm)
- With soft-close

Drillings and cut-outs

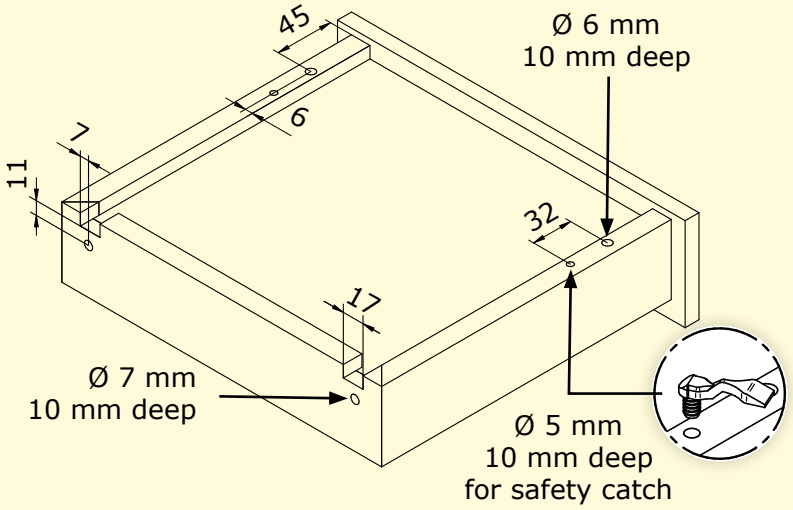

Drawer length in mm	Cabinet runner in mm	Drawer runner in mm	Soft-close	Runners/Box	Boxes/Pallet maximum
250	214	260	x	40	45
300	246	310	x	40	35
350	246	360	x	40	35
400	278	410	x	32	42
450	310	460	x	32	42
500	342	510	x	32	30
550	342	560	x	32	30

Length and hole pattern of the cabinet runner

Length cabinet runner A	214	246	278	310	342
Hole distance B	160	192	224	256	288

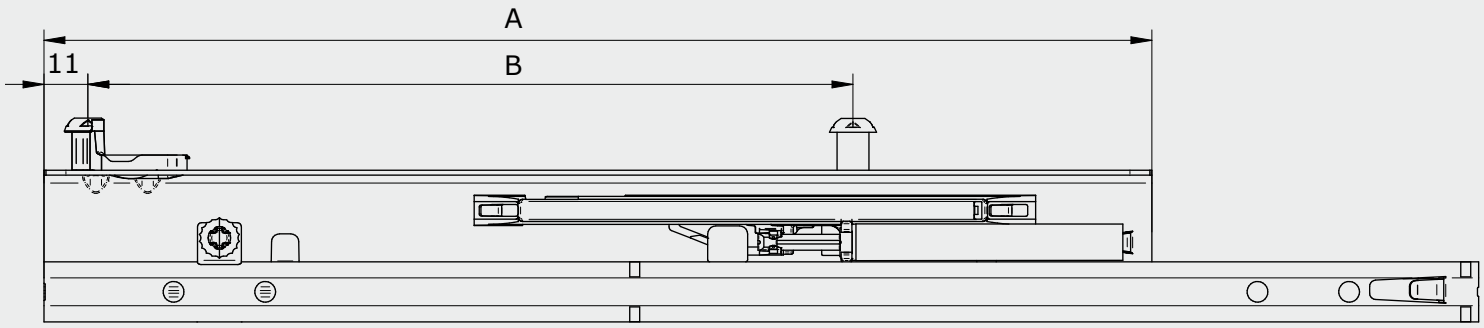

Drillings in the cabinet

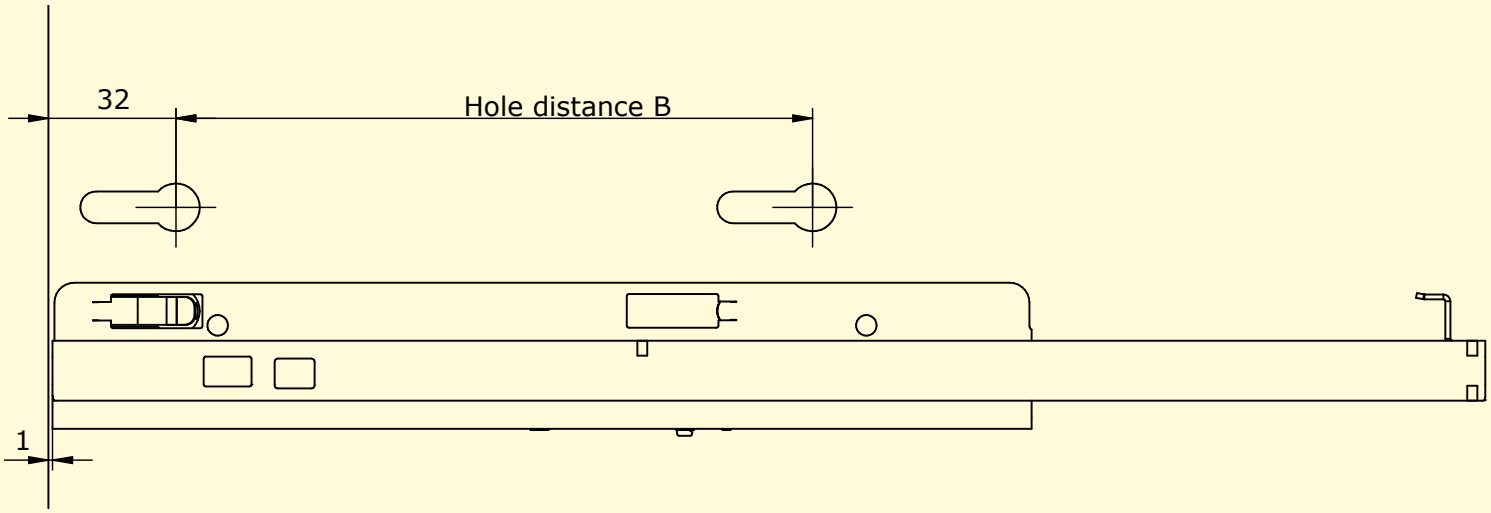

Pieces/Pallet maximum	Weight/Pallet maximum	Order number left side	Order number right side
1800	610	3612502011500	3622502011500
1400	551	3613002011500	3623002011500
1400	580	3613502011500	3623502011500
1344	625	3614002011500	3624002011500
1344	698	3614502011500	3624502011500
960	553	3615002011500	3625002011500
960	573	3615502011500	3625502011500

Full Extension EXTREME



Full Extension EXTREME

Self-close _____ Page 58
Soft-close _____ Page 64
Push-to-Open _____ Page 72
Push-to-Open synchronization _____ Page 76

Product

EXTREME remains calm even under the highest demands. Its uniform geometry skillfully absorbs incorrect loads. The full-extension runner is characterized by its very smooth and precise running characteristics. It therefore meets all the functional requirements of modern living - ideal for any wooden drawer.

Variants

The EXTREME full-extension runner is available with self-close, with soft-close and with the push-to-open. The following options are available for attaching and detaching drawers: plug-on assembly, 1D coupling and 2D coupling. The EXTREME full-extension runner offers two anti-lift systems for drawer locking.

Full Extension EXTREME
Self-close and plug-on assembly

Installation Dimensions

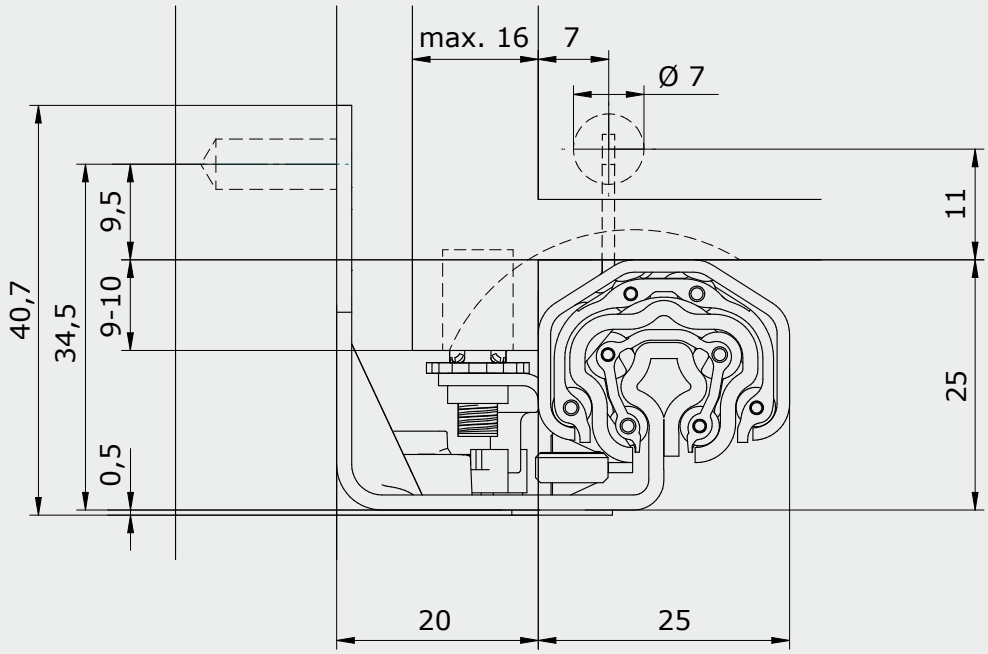

Features

- Star-shaped profile
- Loading capacity up to 30 kg
- Lengths from 250 to 550 mm
- Quick plug-on assembly of the drawer
- Stepless height adjustment
- High tracking stability with smooth running
- Perfect height and lateral stability
- With self-close

Drillings and cut-outs

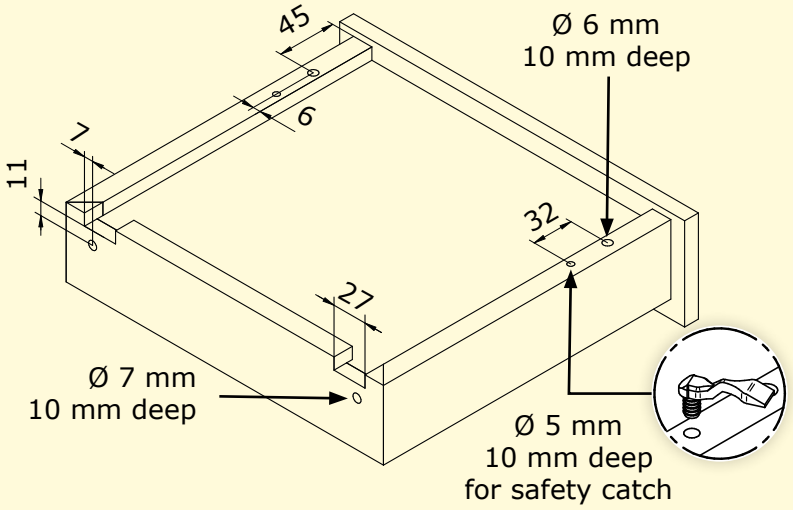

Drawer length in mm	Cabinet runner in mm	Middle runner in mm	Drawer runner in mm	Self-close	Runners/Box
250	214	214,3	260	x	24
300	246	254,7	310	x	24
350	246	254,7	360	x	24
400	278	254,7	410	x	24
450	310	295,1	460	x	24
500	310	295,1	510	x	24
550	342	375,9	560	x	24

Length and hole pattern of the cabinet runner

Length cabinet runner A	214	246	278	310	342
Hole distance B	160	192	224	256	288

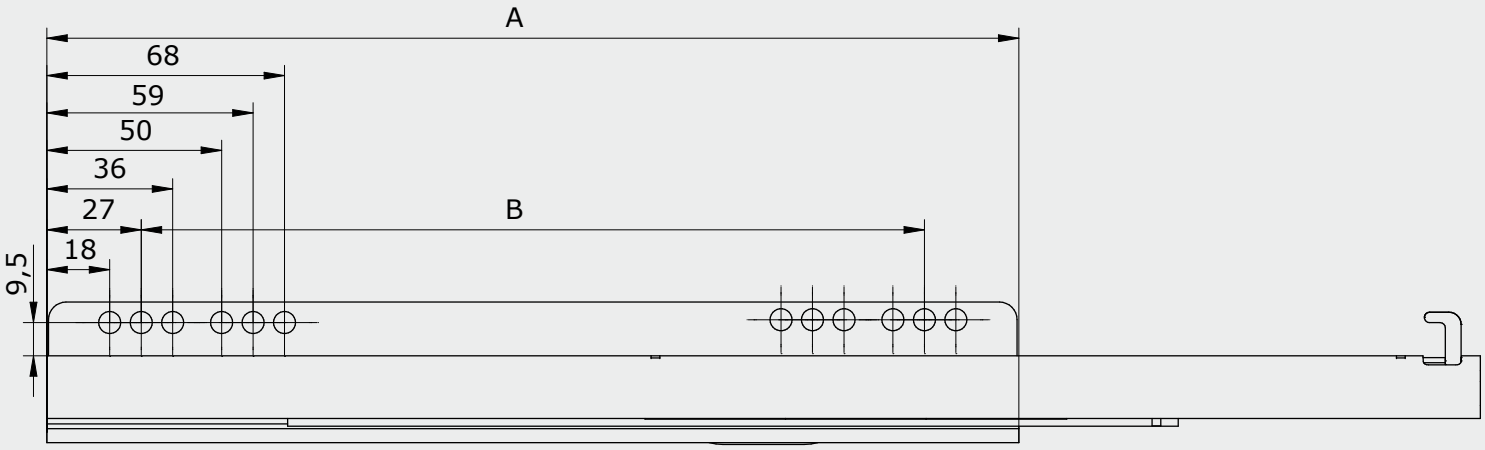

Drillings in the cabinet

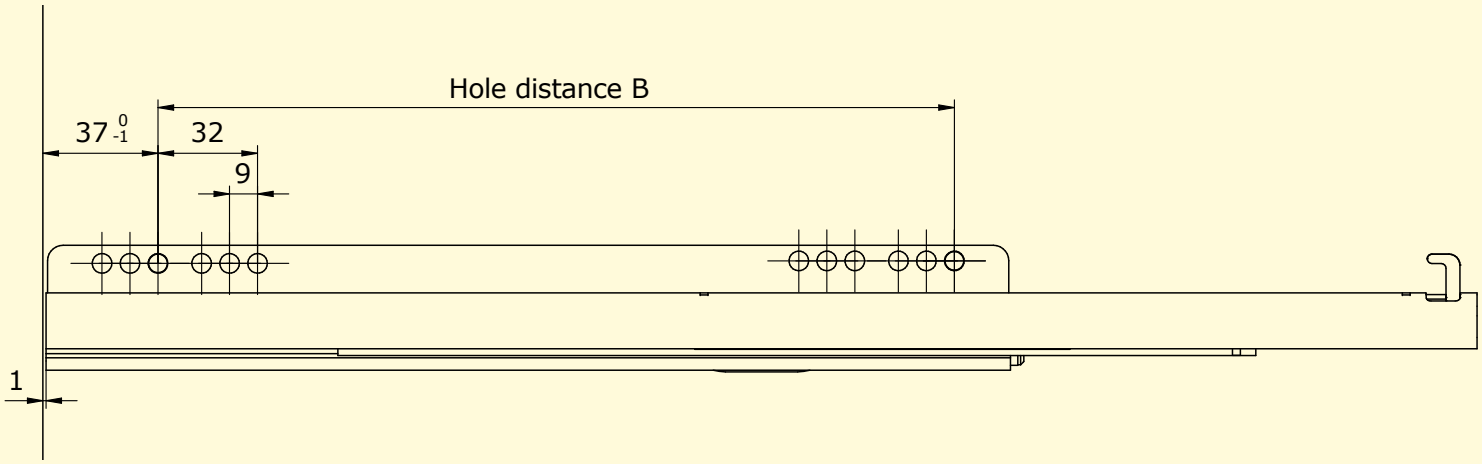

Boxes/Pallet maximum	Pieces/Pallet maximum	Weight/Pallet maximum	Order number left side	Order number right side
48	1152	642	4112501001500	4122501001500
50	1200	774	4113001001500	4123001001500
50	1200	805	4113501001500	4123501001500
35	840	622	4114001001500	4124001001500
35	840	696	4114501001500	4124501001500
30	720	618	4115001001500	4125001001500
30	720	698	4115501001500	4125501001500

Full Extension EXTREME
Self-close, plug-on assembly and Lift Lock

Installation Dimensions

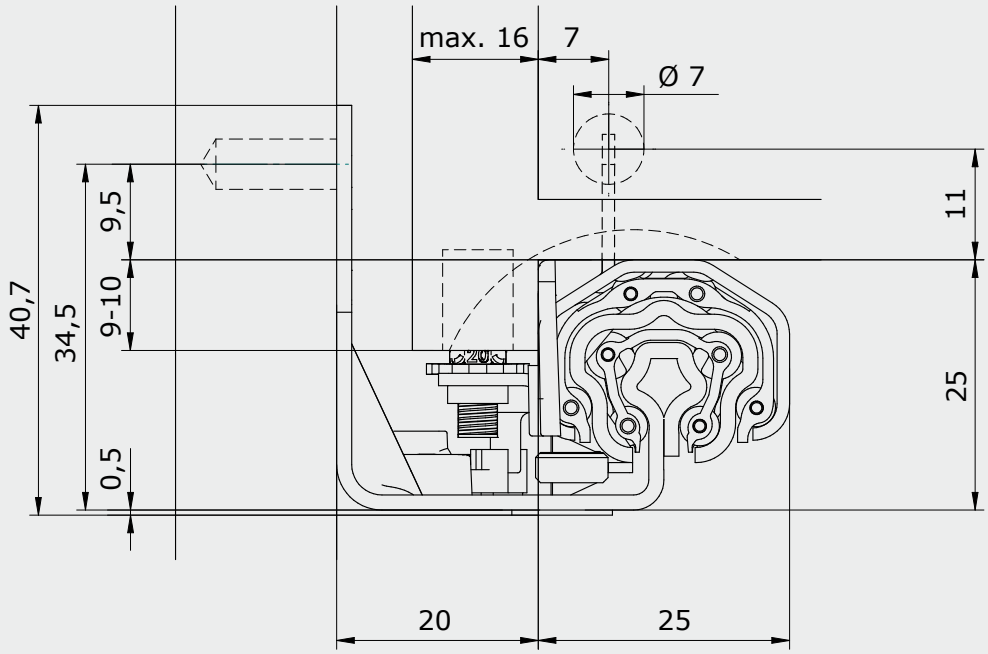

Features

- Star-shaped profile
- Loading capacity up to 30 kg
- Lengths from 250 to 550 mm
- Quick plug-on assembly of the drawer
- Stepless height adjustment
- High tracking stability with smooth running
- Perfect height and lateral stability
- With self-close
- With pre-assembled safety catch

Drillings and cut-outs

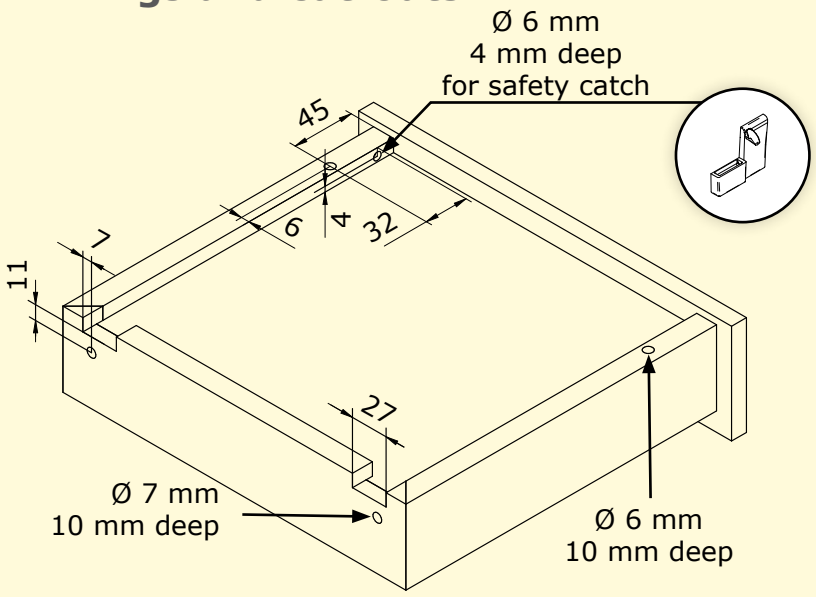

Drawer length in mm	Cabinet runner in mm	Middle runner in mm	Drawer runner in mm	Self-close	Runners/Box
250	214	214,3	245	x	24
300	246	254,7	295	x	24
350	246	254,7	345	x	24
400	278	254,7	395	x	24
450	310	295,1	445	x	24
500	310	295,1	495	x	24
550	342	375,9	545	x	24

Length and hole pattern of the cabinet runner

Length cabinet runner A	214	246	278	310	342
Hole distance B	160	192	224	256	288

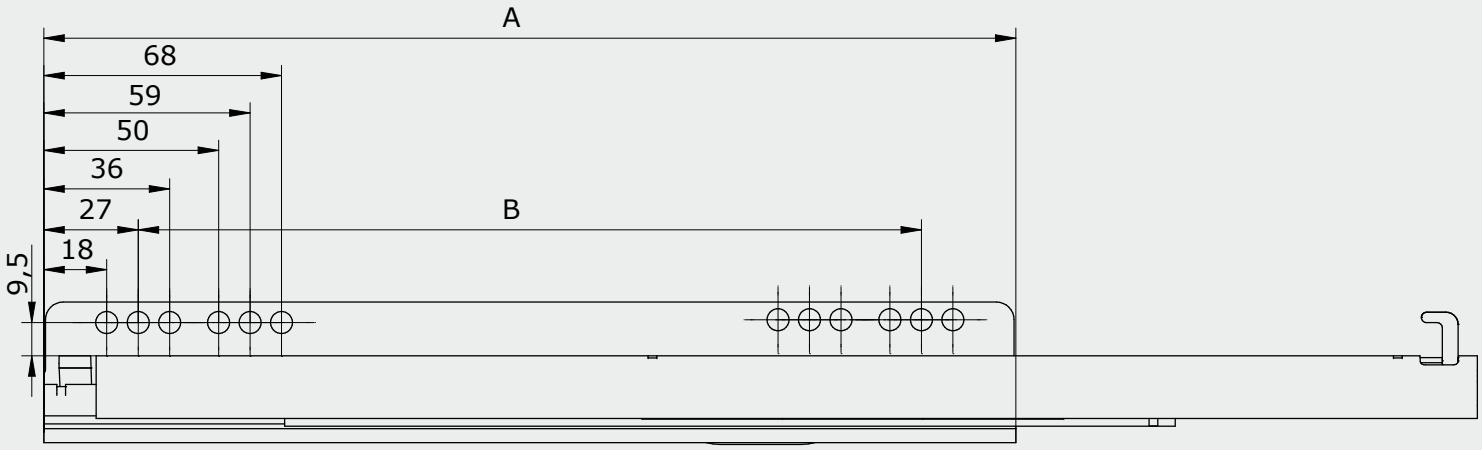

Drillings in the cabinet

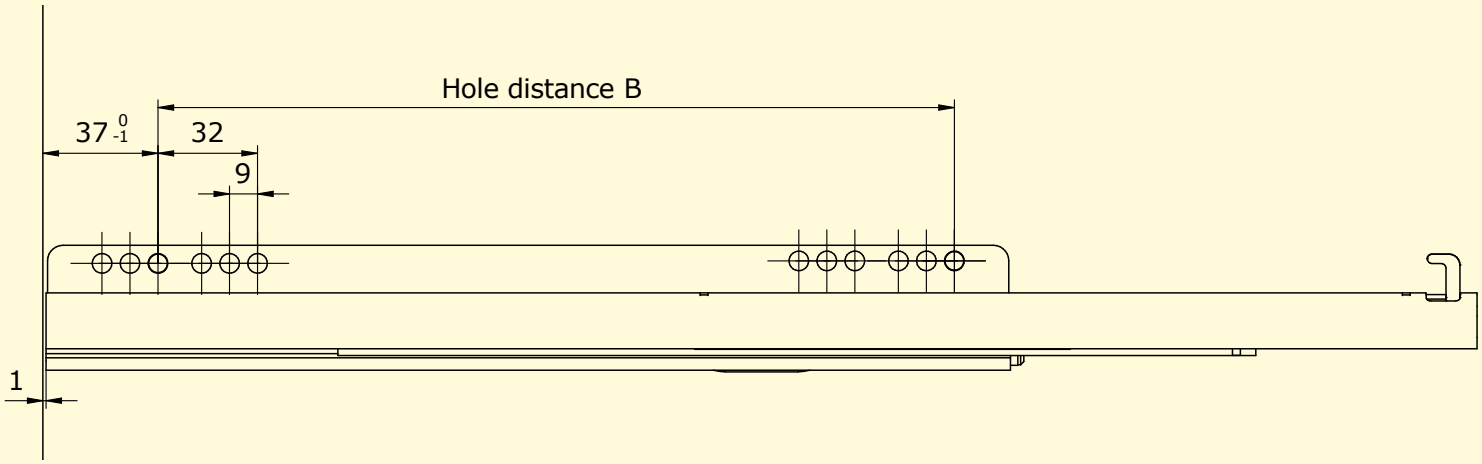

Boxes/Pallet maximum	Pieces/Pallet maximum	Weight/Pallet maximum	Order number left side	Order number right side
48	1152	630	4112501001200	4122501001200
50	1200	765	4113001001200	4123001001200
50	1200	735	4113501001200	4123501001200
35	840	616	4114001001200	4124001001200
35	840	683	4114501001200	4124501001200
30	720	613	4115001001200	4125001001200
30	720	693	4115501001200	4125501001200

Full Extension EXTREME
Self-close and coupling

Installation Dimensions

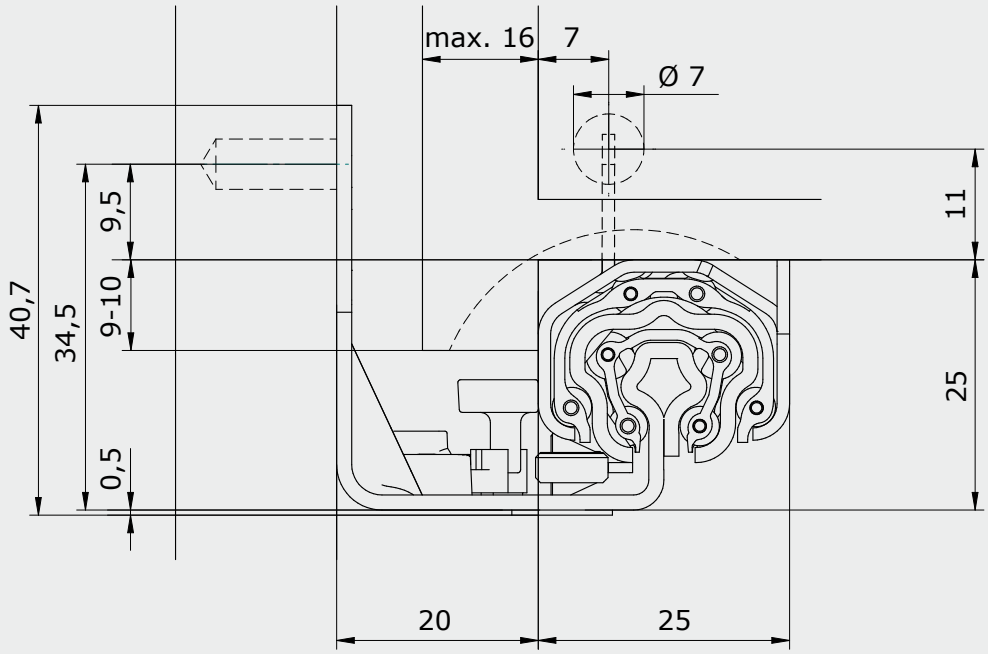

Features

- Star-shaped profile
- Loading capacity up to 30 kg
- Lengths from 250 to 550 mm
- Stepless height adjustment
- High tracking stability with smooth running
- Perfect height and lateral stability
- With self-close
- Optionally with 2D or 3D coupling

Coupling technology

With the different coupling options, drawers can be installed and removed in no time. The system combines pull-out protection, coupling and adjustment in a single component. Available in either a 2D version (height and side adjustment) or a 3D version (height, side and depth adjustment). This allows precise and uniform gap alignment to be achieved quickly, easily and without tools.

2D



3D



Drawer length in mm	Cabinet runner in mm	Middle runner in mm	Drawer runner in mm	Self-close	Runners/Box
250	214	214,3	260	x	24
300	246	254,7	310	x	24
350	246	254,7	360	x	24
400	278	254,7	410	x	24
450	310	295,1	460	x	24
500	310	295,1	510	x	24
550	342	375,9	560	x	24

Length and hole pattern of the cabinet runner

Length cabinet runner A	214	246	278	310	342
Hole distance B	160	192	224	256	288

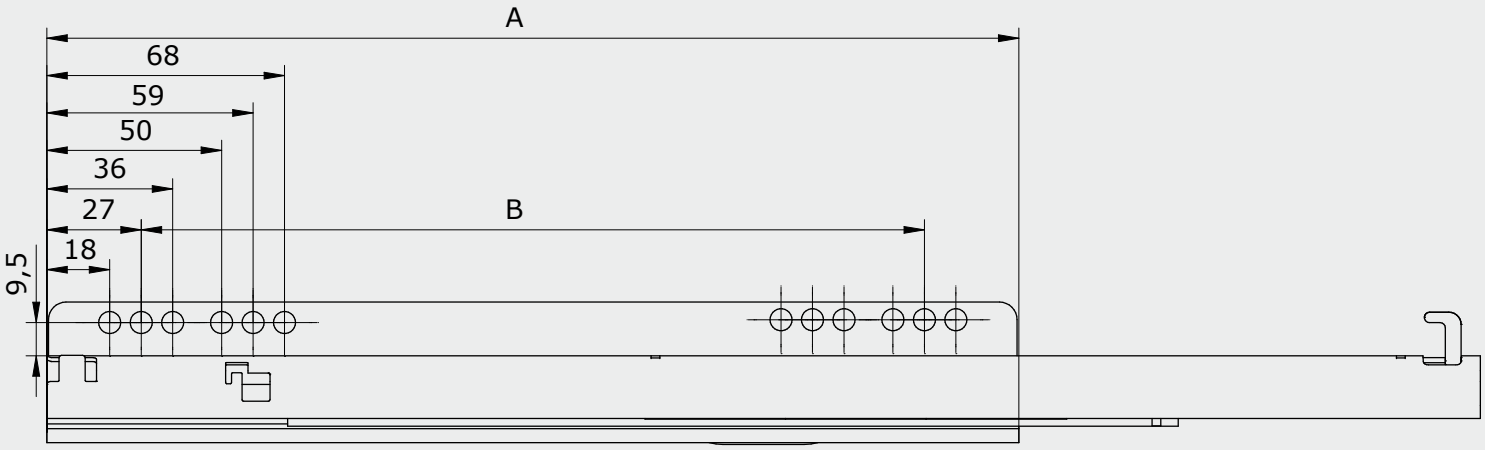

Drillings in the cabinet

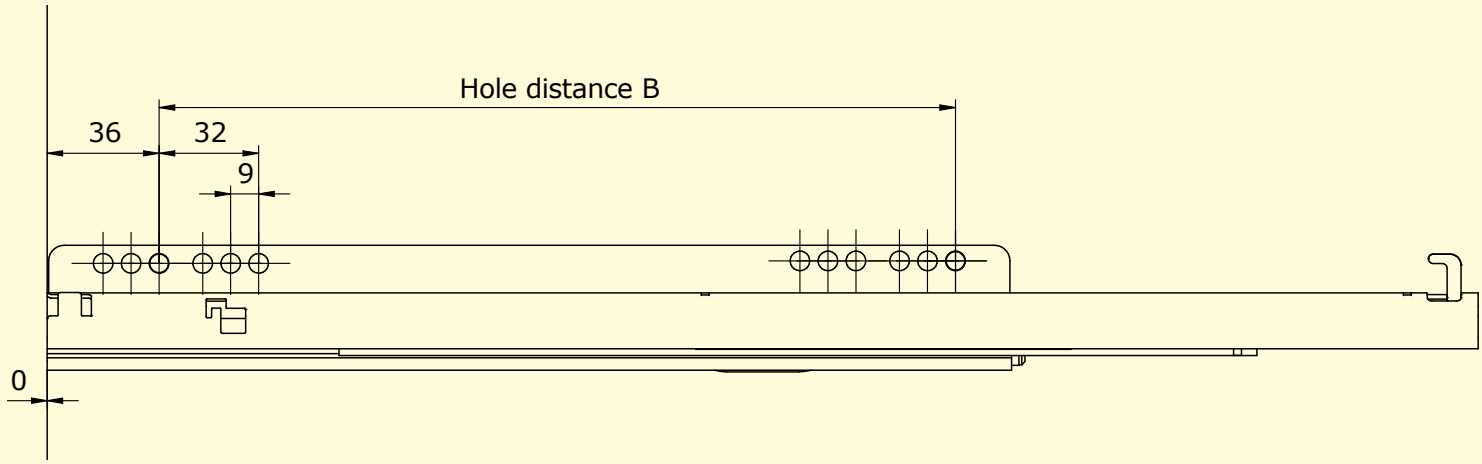

Boxes/Pallet maximum	Pieces/Pallet maximum	Weight/Pallet maximum	Order number left side	Order number right side
48	1152	637	4112501001100	4122501001000
50	1200	770	4113001001100	4123001001000
50	1200	800	4113501001100	4123501001000
35	840	620	4114001001100	4124001001000
35	840	694	4114501001100	4124501001000
30	720	615	4115001001100	4125001001000
30	720	696	4115501001100	4125501001000

Full Extension EXTREME
Soft-close and plug-on assembly

Installation Dimensions

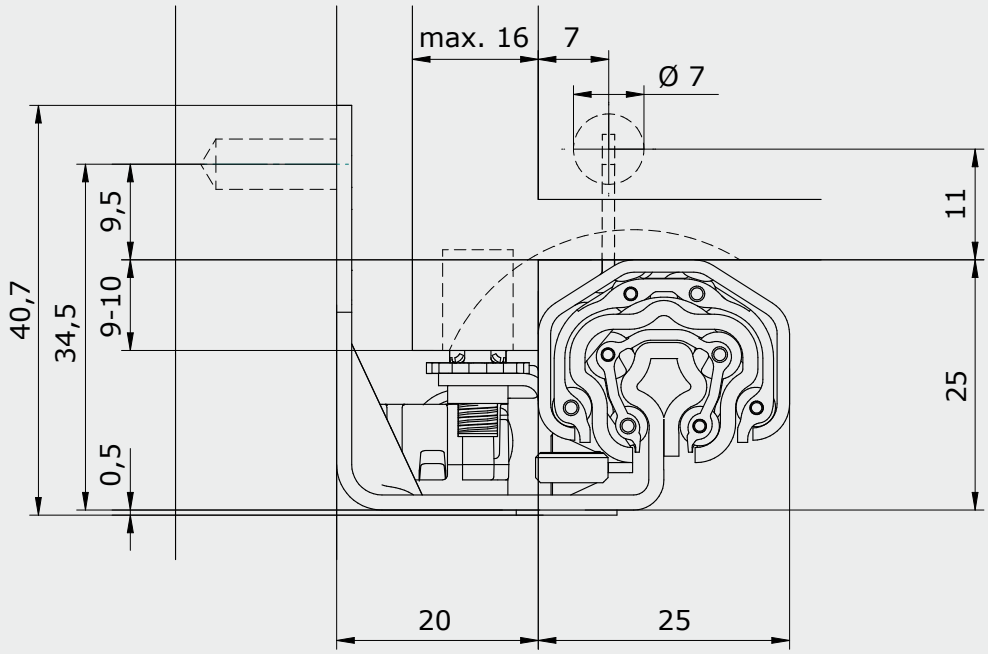

Features

- Star-shaped profile
- Loading capacity up to 30 kg
- Lengths from 250 to 550 mm
- Quick plug-on assembly of the drawer
- Stepless height adjustment
- High tracking stability with smooth running
- Perfect height and lateral stability
- With soft-close

Drillings and cut-outs

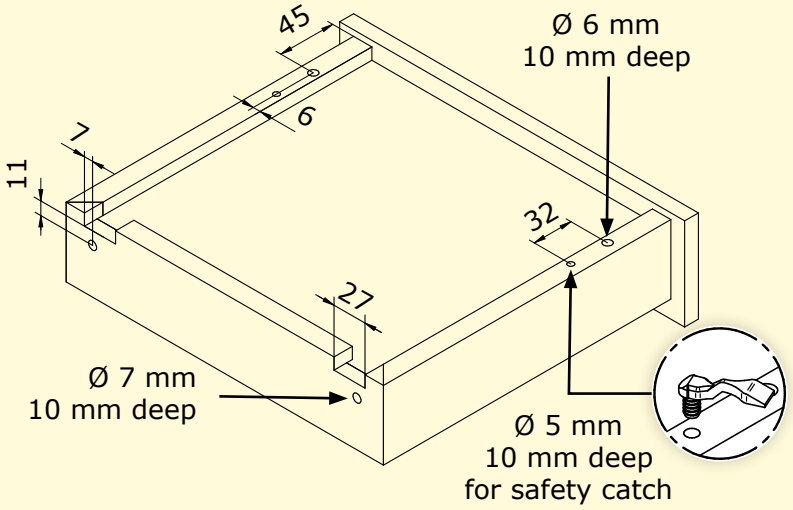

Drawer length in mm	Cabinet runner in mm	Middle runner in mm	Drawer runner in mm	Soft-close	Runners/Box
250	214	214,3	260	x	24
300	246	254,7	310	x	24
350	246	254,7	360	x	24
400	278	254,7	410	x	24
450	310	295,1	460	x	24
500	310	295,1	510	x	24
550	342	375,9	560	x	24

Length and hole pattern of the cabinet runner

Length cabinet runner A	214	246	278	310	342
Hole distance B	160	192	224	256	288

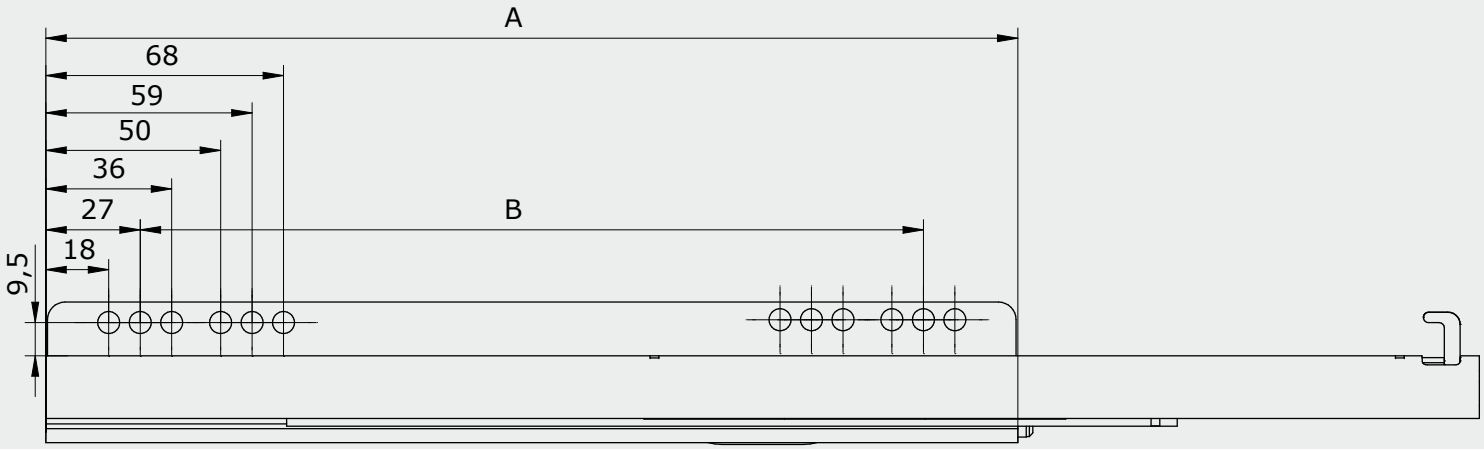

Drillings in the cabinet

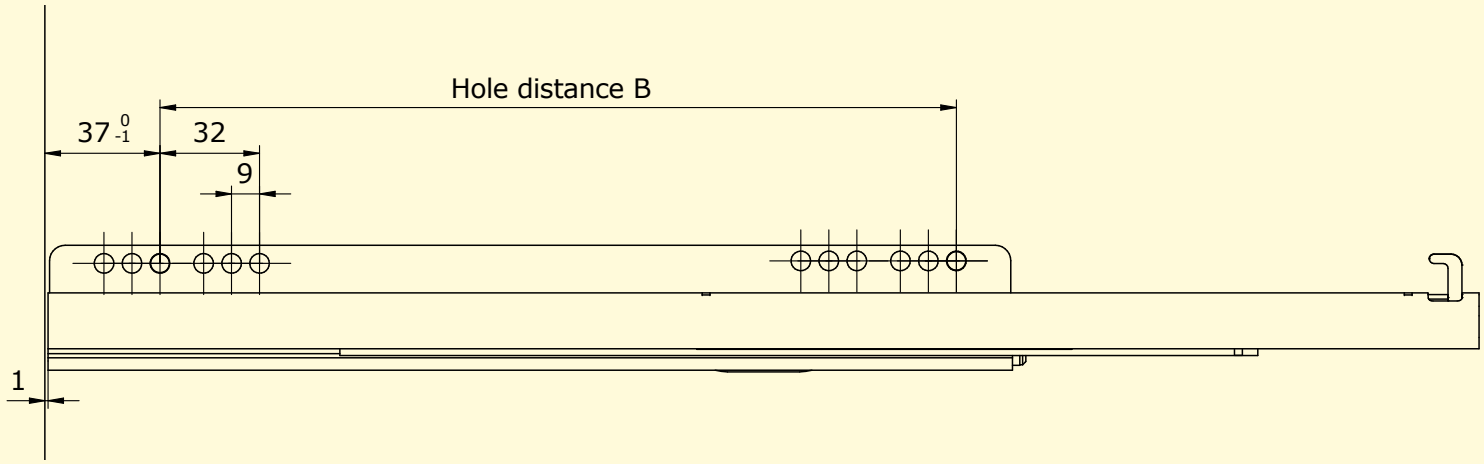

Boxes/Pallet maximum	Pieces/Pallet maximum	Weight/Pallet maximum	Order number left side	Order number right side
48	1152	654	4112502001500	4122502001500
50	1200	786	4113002001500	4123002001500
50	1200	816	4113502001500	4123502001500
35	840	630	4114002001500	4124002001500
35	840	704	4114502001500	4124502001500
30	720	624	4115002001500	4125002001500
30	720	747	4115502001500	4125502001500

Full Extension EXTREME
Soft-close, plug-on assembly and Lift Lock

Installation Dimensions

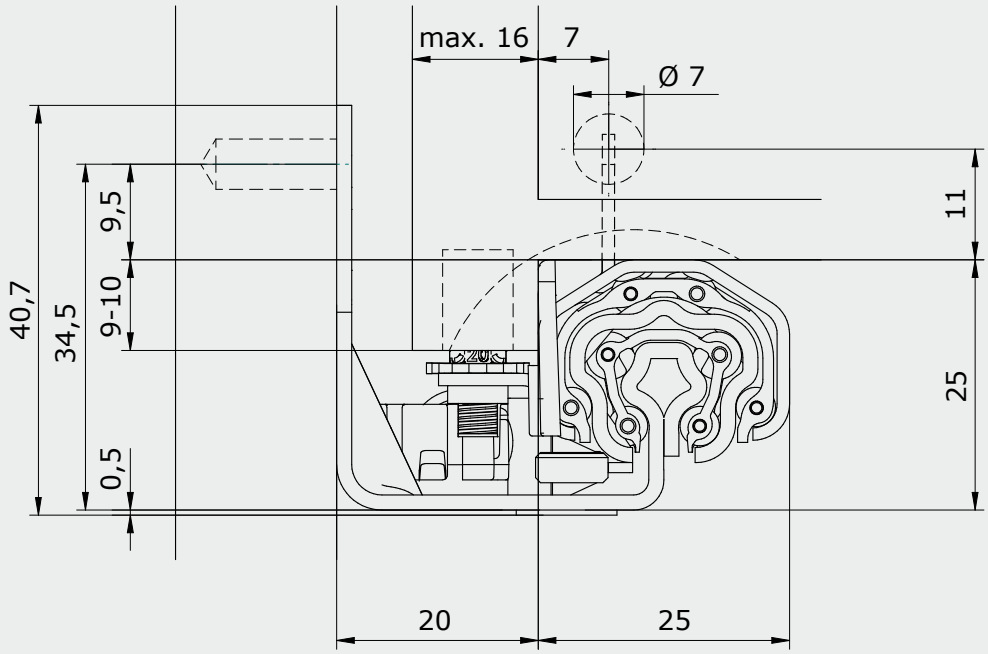

Features

- Star-shaped profile
- Loading capacity up to 30 kg
- Lengths from 250 to 550 mm
- Quick plug-on assembly of the drawer
- Stepless height adjustment
- High tracking stability with smooth running
- Perfect height and lateral stability
- With soft-close
- With pre-assembled safety catch

Drillings and cut-outs

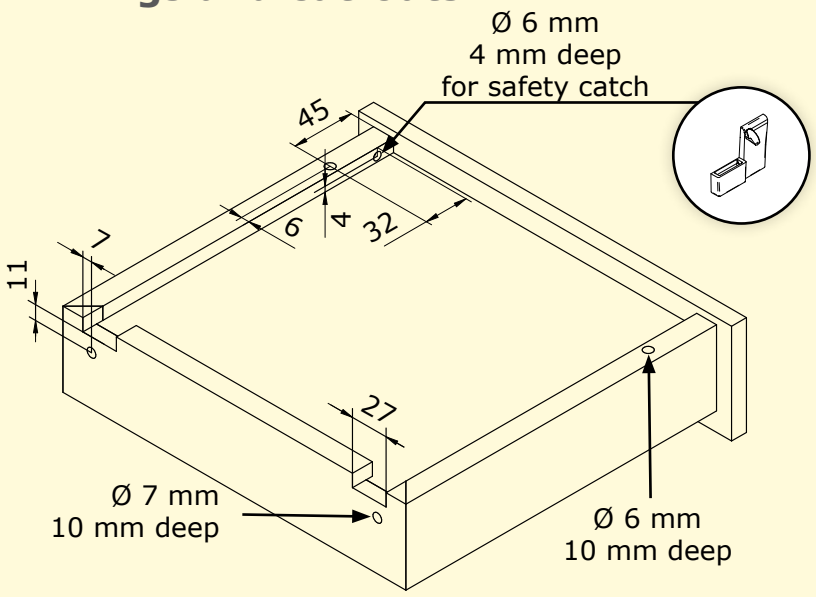

Drawer length in mm	Cabinet runner in mm	Middle runner in mm	Drawer runner in mm	Soft-close	Runners/Box
250	214	214,3	245	x	24
300	246	254,7	295	x	24
350	246	254,7	345	x	24
400	278	254,7	395	x	24
450	310	295,1	445	x	24
500	310	295,1	495	x	24
550	342	375,9	545	x	24

Length and hole pattern of the cabinet runner

Length cabinet runner A	214	246	278	310	342
Hole distance B	160	192	224	256	288

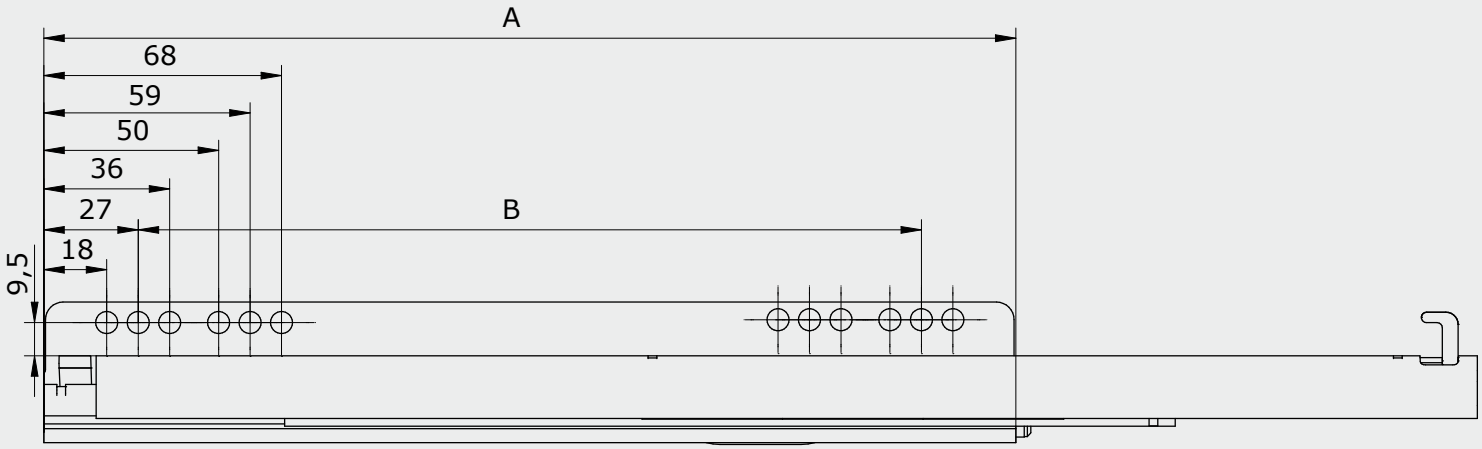

Drillings in the cabinet

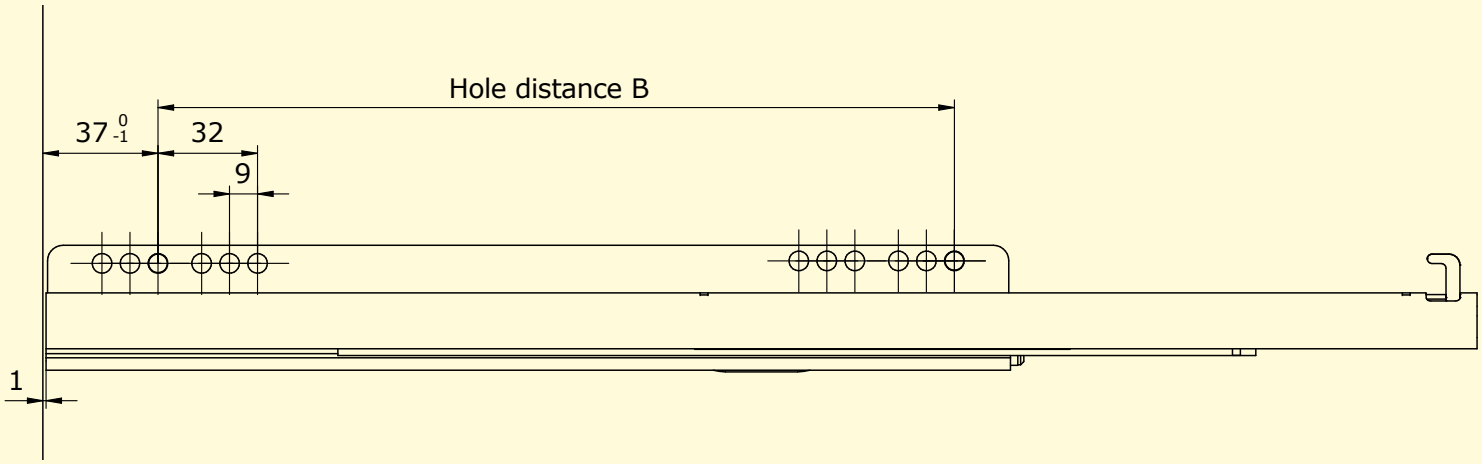

Boxes/Pallet maximum	Pieces/Pallet maximum	Weight/Pallet maximum	Order number left side	Order number right side
48	1152	643	4112502001200	4122502001200
50	1200	776	4113002001200	4123002001200
50	1200	806	4113502001200	4123502001200
35	840	625	4114002001200	4124002001200
35	840	697	4114502001200	4124502001200
30	720	619	4115002001200	4125002001200
30	720	699	4115502001200	4125502001200

Full Extension EXTREME
Soft-close and coupling

Installation Dimensions

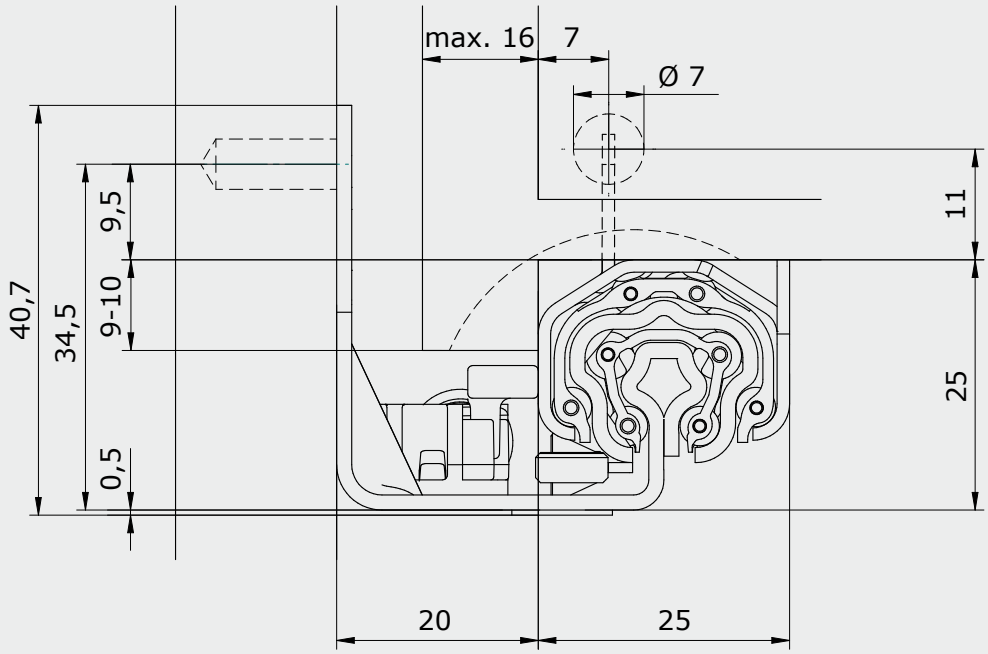

Features

- Star-shaped profile
- Loading capacity up to 30 kg
- Lengths from 250 to 550 mm
- Stepless height adjustment
- High tracking stability with smooth running
- Perfect height and lateral stability
- With soft-close
- Optionally with 2D or 3D coupling

Coupling technology

With the different coupling options, drawers can be installed and removed in no time. The system combines pull-out protection, coupling and adjustment in a single component. Available in either a 2D version (height and side adjustment) or a 3D version (height, side and depth adjustment). This allows precise and uniform gap alignment to be achieved quickly, easily and without tools.

2D



3D



Drawer length in mm	Cabinet runner in mm	Middle runner in mm	Drawer runner in mm	Soft-close	Runners/Box
250	214	214,3	260	x	24
300	246	254,7	310	x	24
350	246	254,7	360	x	24
400	278	254,7	410	x	24
450	310	295,1	460	x	24
500	310	295,1	510	x	24
550	342	375,9	560	x	24

Length and hole pattern of the cabinet runner

Length cabinet runner A	214	246	278	310	342
Hole distance B	160	192	224	256	288

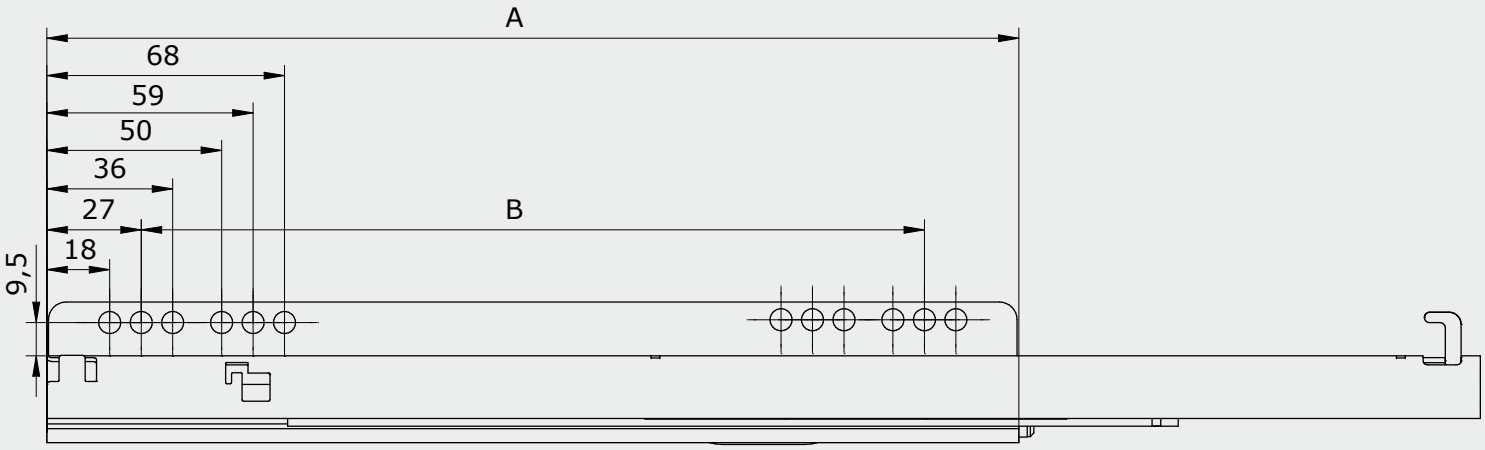

Drillings in the cabinet

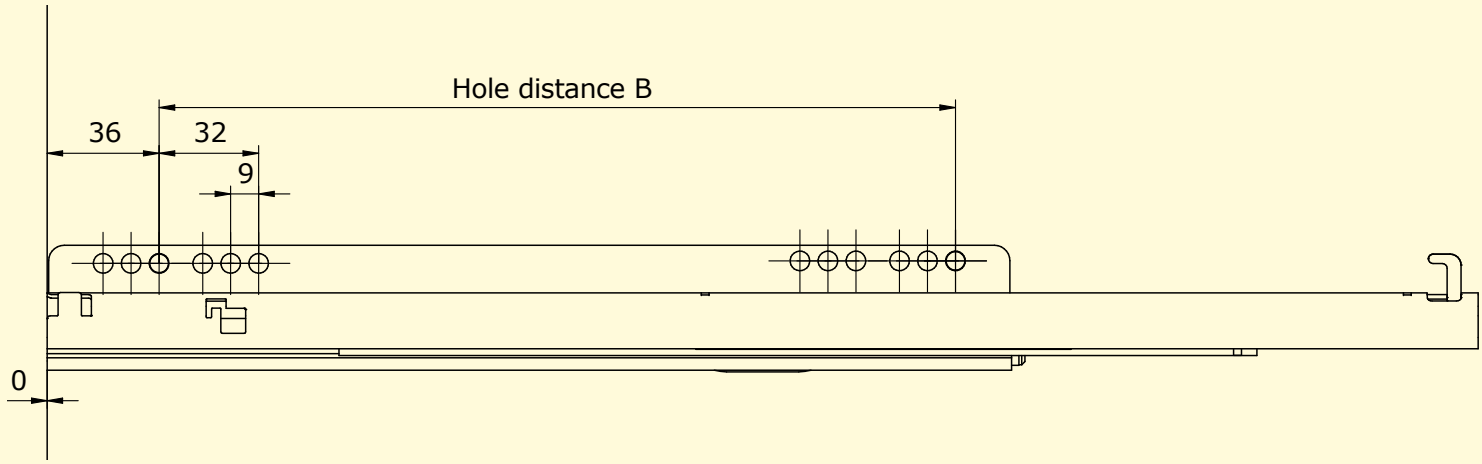

Boxes/Pallet maximum	Pieces/Pallet maximum	Weight/Pallet maximum	Order number left side	Order number right side
48	1152	637	4112502001100	4122502001000
50	1200	770	4113002001100	4123002001000
50	1200	800	4113502001100	4123502001000
35	840	620	4114002001100	4124002001000
35	840	694	4114502001100	4124502001000
30	720	615	4115002001100	4125002001000
30	720	696	4115502001100	4125502001000

Full Extension EXTREME
Push-to-Open and plug-on assembly

Installation Dimensions

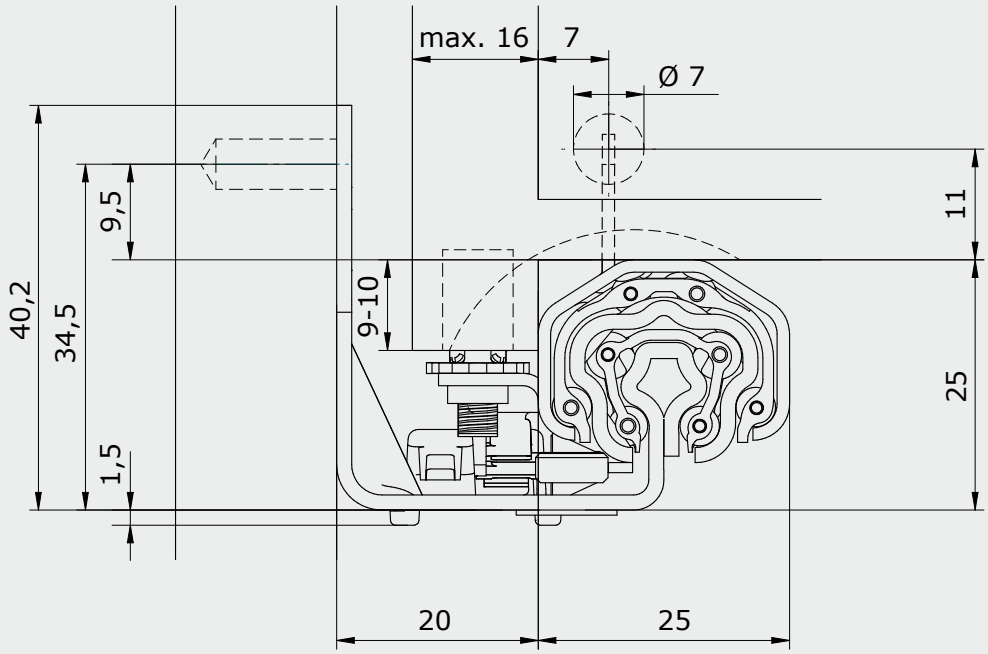

Features

- Star-shaped profile
- Loading capacity up to 30 kg
- Lengths from 250 to 550 mm
- Quick plug-on assembly of the drawer
- Stepless height adjustment
- High tracking stability with smooth running
- Perfect height and lateral stability
- Trigger path/reveal gap = 3 mm
- With Push-to-Open

Drillings and cut-outs

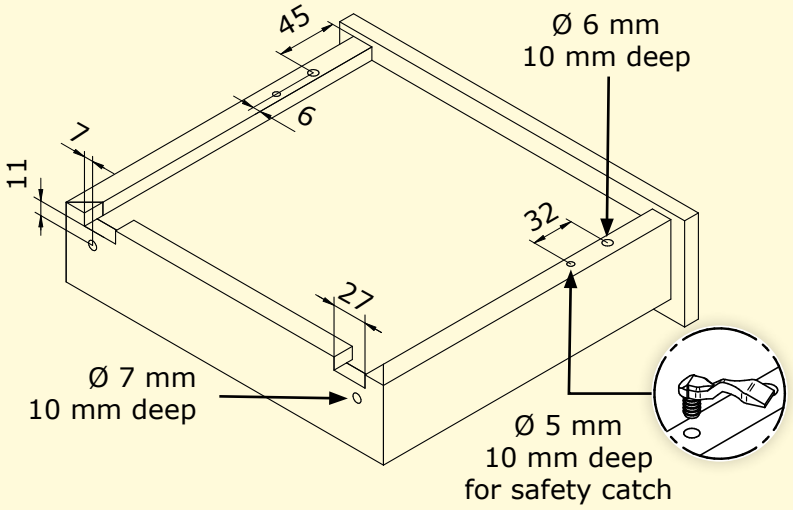

Drawer length in mm	Cabinet runner in mm	Middle runner in mm	Drawer runner in mm	Push-to-Open	Runners/Box
250	214	214,3	260	x	24
300	246	254,7	310	x	24
350	278	254,7	360	x	24
400	310	254,7	410	x	24
450	342	295,1	460	x	24
500	342	295,1	510	x	24
550	406	375,9	560	x	24

Length and hole pattern of the cabinet runner

Length cabinet runner A	214	246	278	310	342	406
Hole distance B	160	192	224	256	288	320

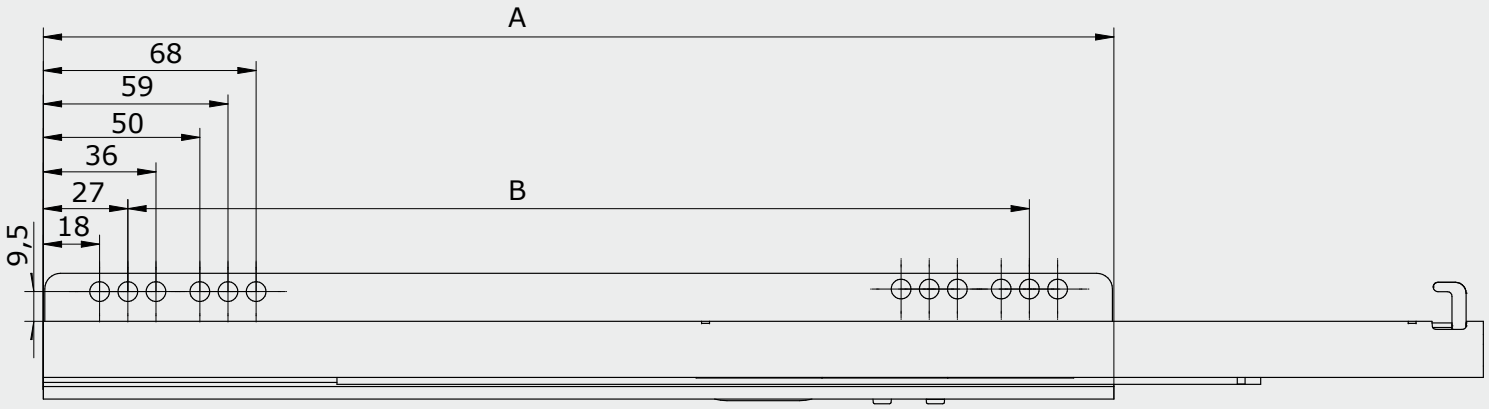

Drillings in the cabinet

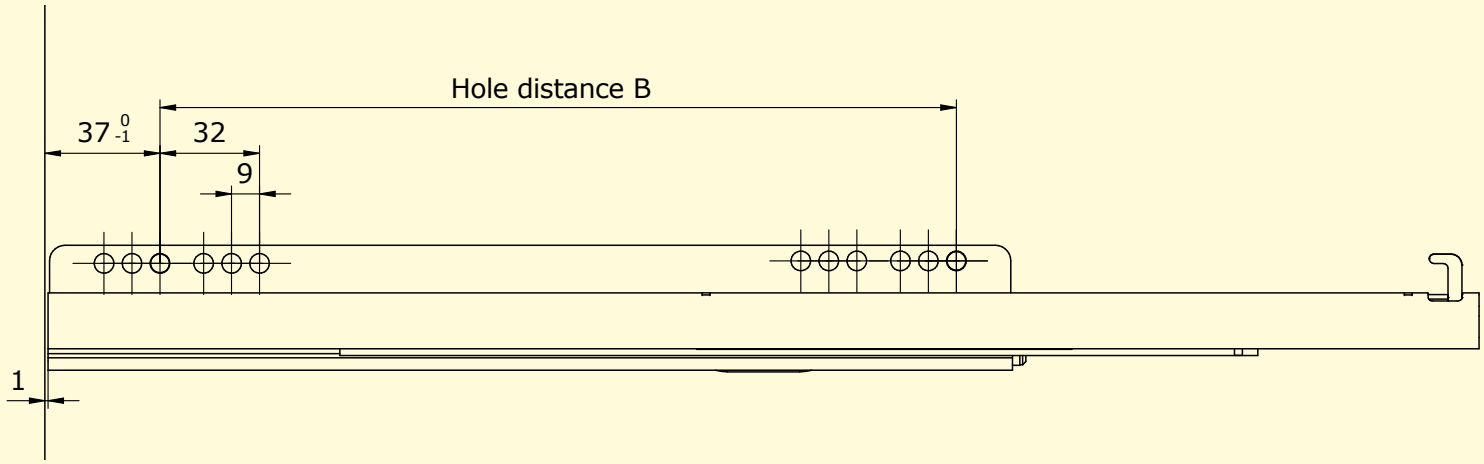

Boxes/Pallet maximum	Pieces/Pallet maximum	Weight/Pallet maximum	Order number left side	Order number right side
48	1152	641	4112503001500	4122503001500
50	1200	774	4113003001500	4123003001500
50	1200	851	4113503001500	4123503001500
35	840	654	4114003001500	4124003001500
35	840	729	4114503001500	4124503001500
30	720	646	4115003001500	4125003001500
30	720	755	4115503001500	4125503001500

Full Extension EXTREME
Push-to-Open and Coupling

Installation Dimensions

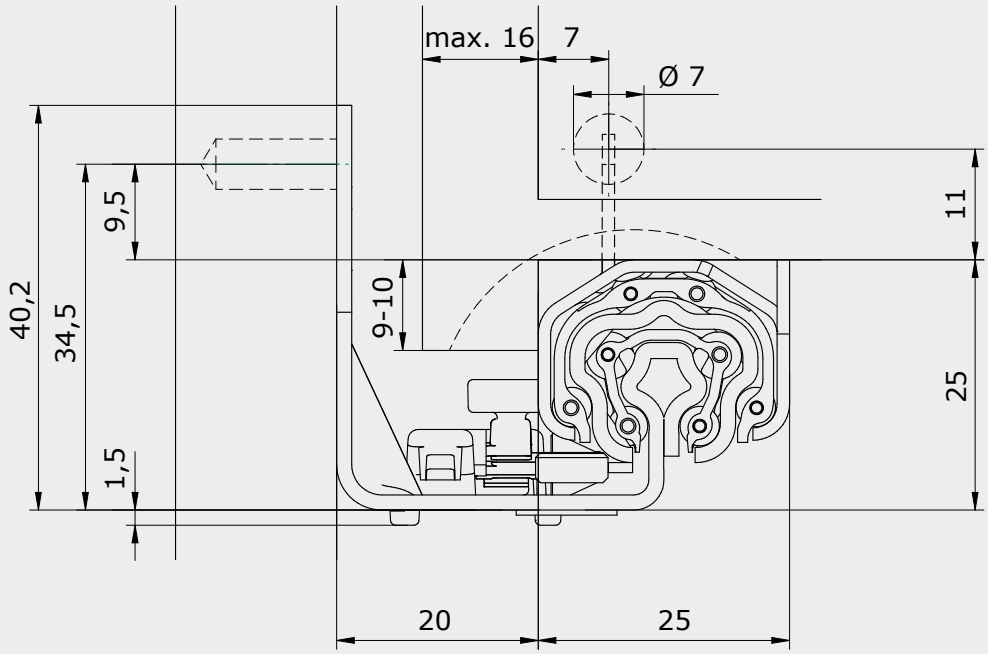

Features

- Star-shaped profile
- Loading capacity up to 30 kg
- Lengths from 250 to 550 mm
- Stepless height adjustment
- High tracking stability with smooth running
- Perfect height and lateral stability
- Trigger path/reveal gap = 3 mm
- With Push-to-Open
- Optionally with 2D or 3D coupling

Coupling technology

With the different coupling options, drawers can be installed and removed in no time. The system combines pull-out protection, coupling and adjustment in a single component. Available in either a 2D version (height and side adjustment) or a 3D version (height, side and depth adjustment). This allows precise and uniform gap alignment to be achieved quickly, easily and without tools.

2D



3D



Drawer length in mm	Cabinet runner in mm	Middle runner in mm	Drawer runner in mm	Soft-close	Runners/Box
250	214	214,3	260	x	24
300	246	254,7	310	x	24
350	278	254,7	360	x	24
400	310	254,7	410	x	24
450	342	295,1	460	x	24
500	342	295,1	510	x	24
550	406	375,9	560	x	24

Length and hole pattern of the cabinet runner

Length cabinet runner A	214	246	278	310	342	406
Hole distance B	160	192	224	256	288	352

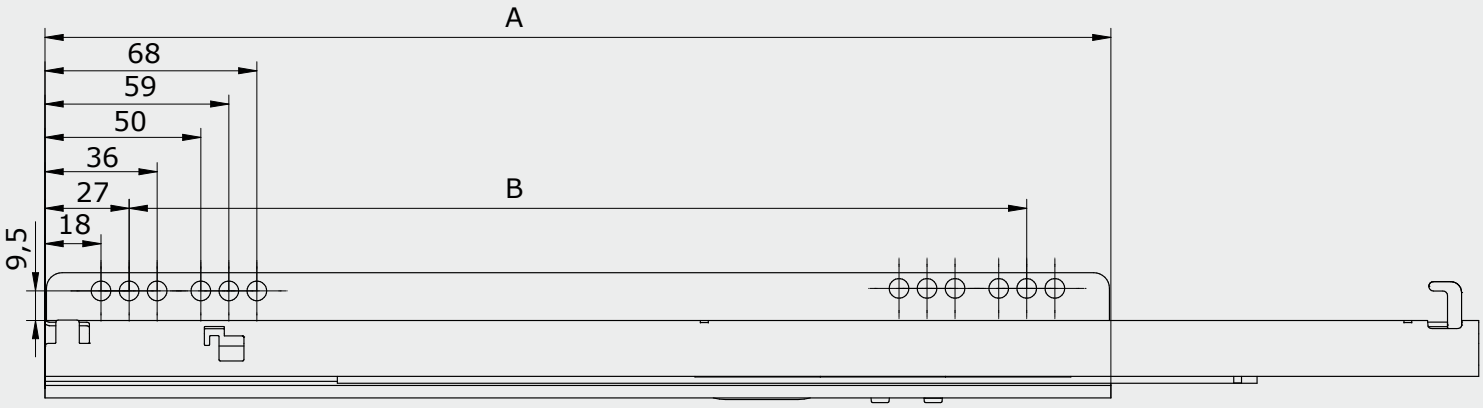

Drillings in the cabinet

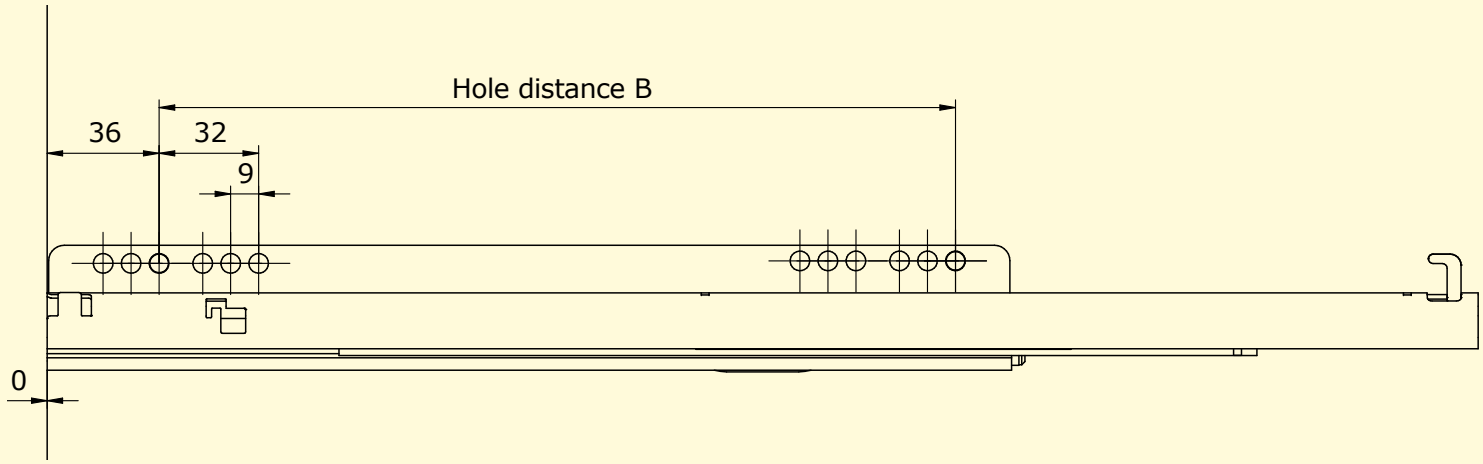

Boxes/Pallet maximum	Pieces/Pallet maximum	Weight/Pallet maximum	Order number left side	Order number right side
48	1152	638	4112503001100	4122503001000
50	1200	770	4113003001100	4123003001000
50	1200	848	4113503001100	4123503001000
35	840	650	4114003001100	4124003001000
35	840	725	4114503001100	4124503001000
30	720	641	4115003001100	4125003001000
30	720	751	4115503001100	4125503001000

Full Extension EXTREME
Push-to-Open synchronization and plug-on assembly

Installation Dimensions

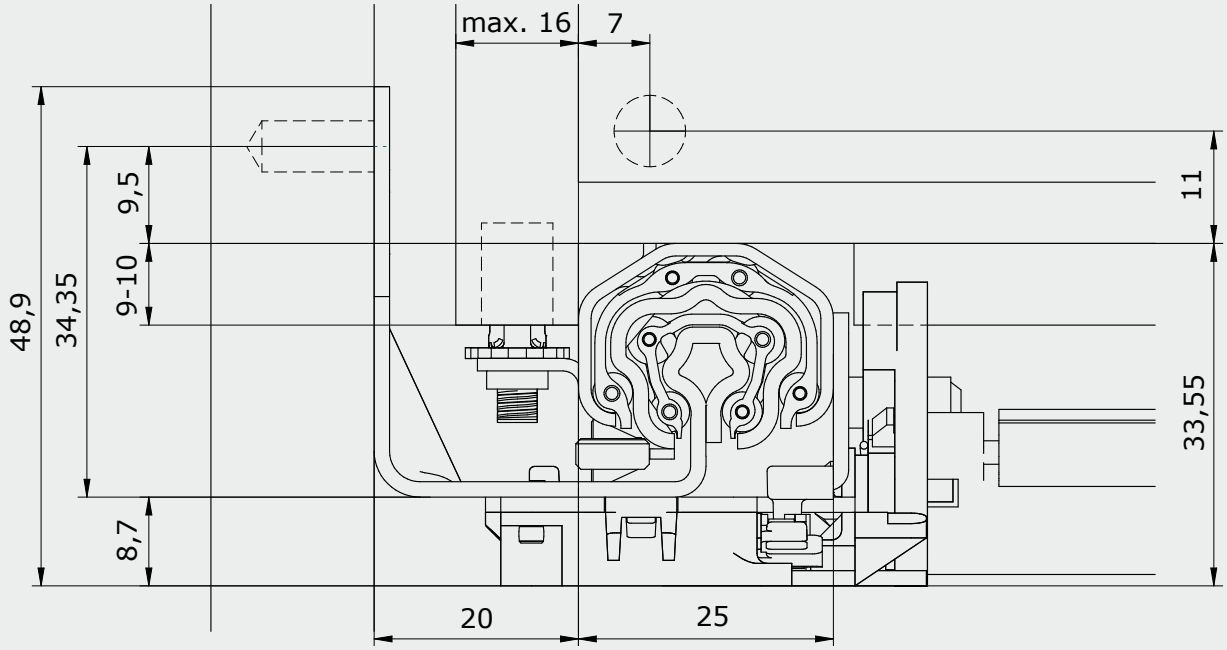

Features

- Star-shaped profile
- Loading capacity up to 30 kg
- Lengths from 250 to 550 mm
- Quick plug-on assembly of the drawer
- Stepless height adjustment
- High tracking stability with smooth running
- Perfect height and lateral stability
- Trigger path/reveal gap = 3 mm
- With Push-to-Open
- Greater sensitivity through synchronization

Drillings and cut-outs

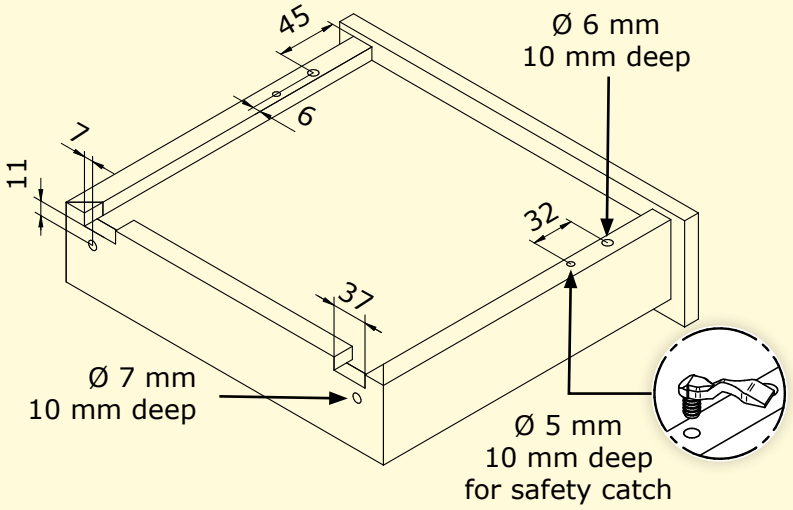

Drawer length in mm	Cabinet runner in mm	Middle runner in mm	Drawer runner in mm	Push-to-Open synchronization	Runners/Box
250	214	214,3	260	x	12
300	246	254,7	310	x	12
350	246	254,7	360	x	12
400	310	254,7	410	x	12
450	342	295,1	460	x	12
500	342	295,1	510	x	12
550	406	375,9	560	x	12

Length and hole pattern of the cabinet runner

Length cabinet runner A	214	246	278	310	342	406
Hole distance B	160	192	224	256	288	320

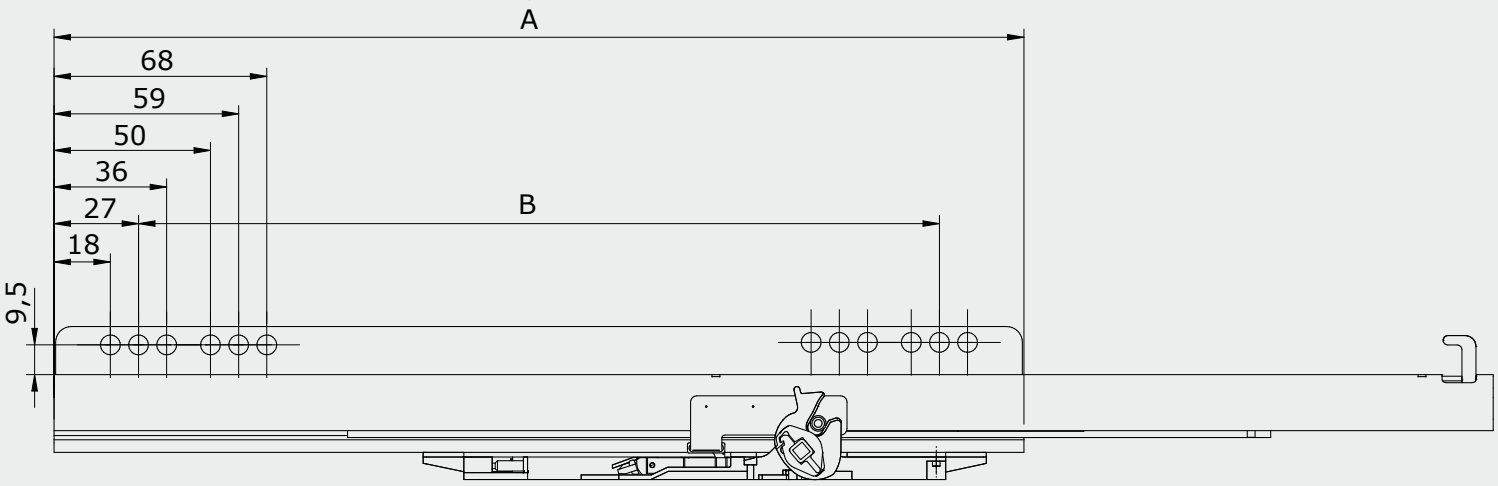

Drillings in the cabinet

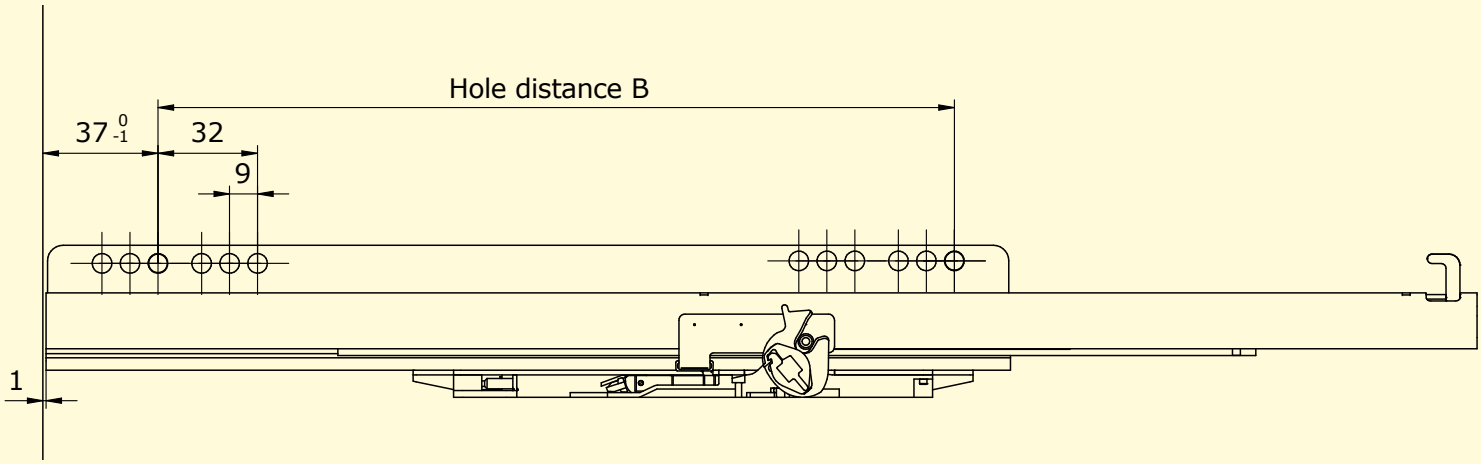

Boxes/Pallet maximum	Pieces/Pallet maximum	Weight/Pallet maximum	Order number left side	Order number right side
48	567	358	4112503011500	4122503011500
50	600	425	4113003011500	4123003011500
50	600	440	4113503011500	4123503011500
35	420	343	4114003011500	4124003011500
35	420	387	4114503011500	4124503011500
30	360	338	4115003011500	4125003011500
30	360	379	4115503011500	4125503011500

Full Extension EXTREME
Push-to-Open synchronization and plug-on assembly

Calculation synchronization linkage

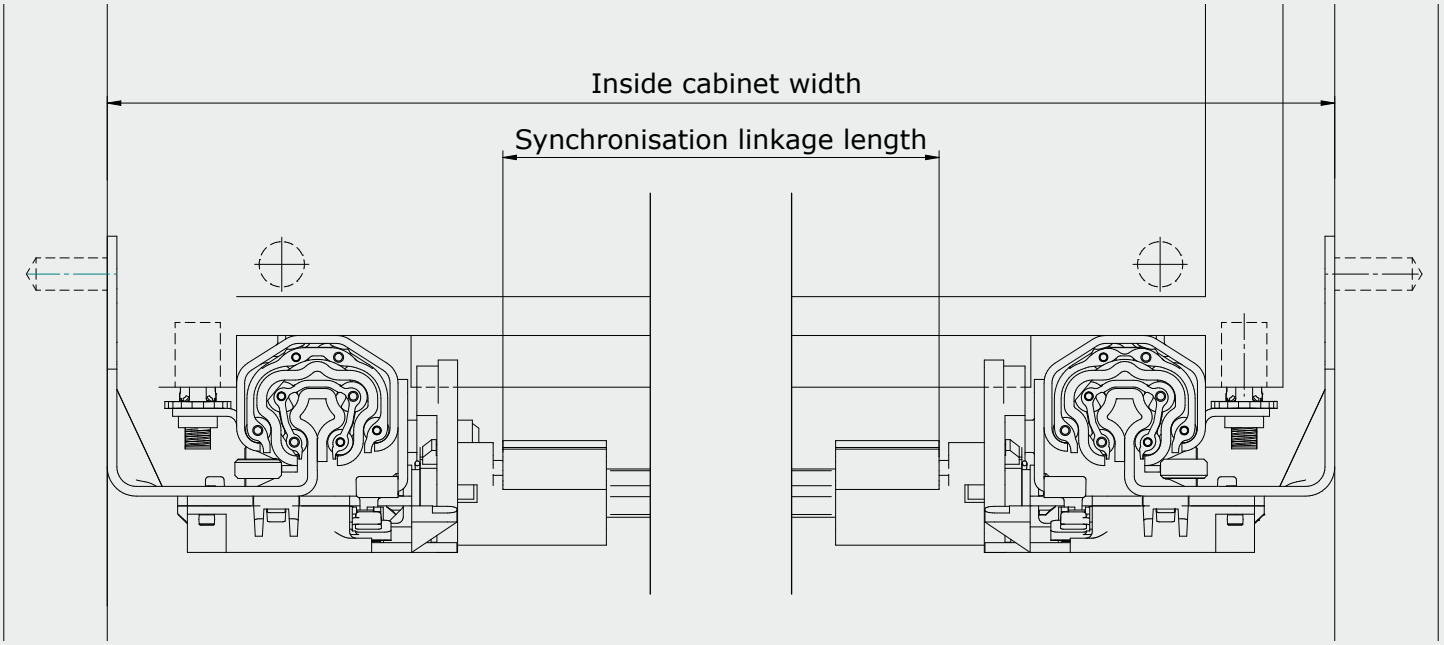

Example calculation
Synchronisation linkage length = Inside cabinet width - 102 mm

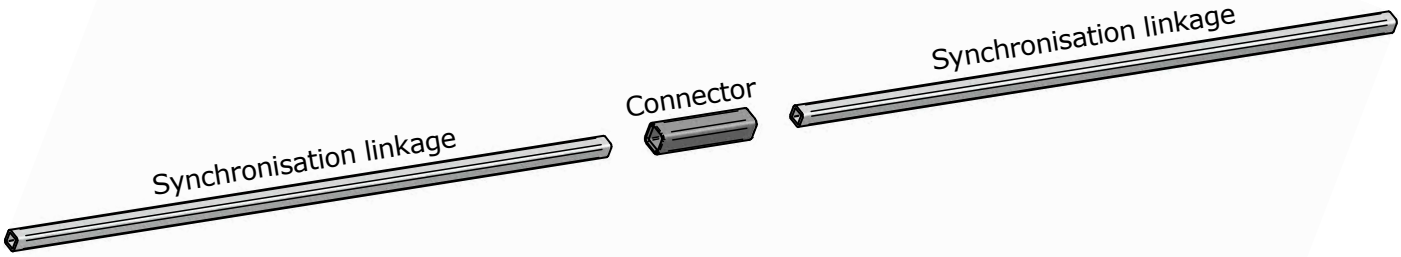

Article overview

Product:	Synchronization linkage	Connector
Dimensions:	6x6 mm, 1100 mm long	9x9 mm, 40 mm long
Material:	Aluminium	Plastic
Info:	For self-cutting	For extending the synchronizer linkage
Order number:	2060000000026	2060000000027

Full Extension EXTREME PEANUT®



Full Extension EXTREME PEANUT®

Soft-close _____ Page 82
Push-to-Open _____ Page 86

Product

EXTREME remains calm even under the highest demands. Its uniform geometry skilfully absorbs incorrect loads. The full-extension runner is characterised by its very smooth and precise running behaviour. The PEANUT® connection technology also enables the drawer runner to be fitted without tools. EXTREME PEANUT® therefore fulfils all the functional requirements of modern living - ideal for any wooden drawer. It is optionally available with soft-close and with push-to-open.

PEANUT® connection technology

The PEANUT® is an invisible connector which allows the EXTREME slide to be mounted quickly and easily without tools. The PEANUT® is made of reinforced glass fibre nylon, which ensures a high clamping force when inserted into the cabinet wall. The PEANUT® head is specifically designed to maximise ease of assembly and joint strength. The EXTREME concealed slides can thus be installed quickly, easily and without tools.

Full Extension EXTREME PEANUT®

Soft-close and plug-on assembly

Installation Dimensions

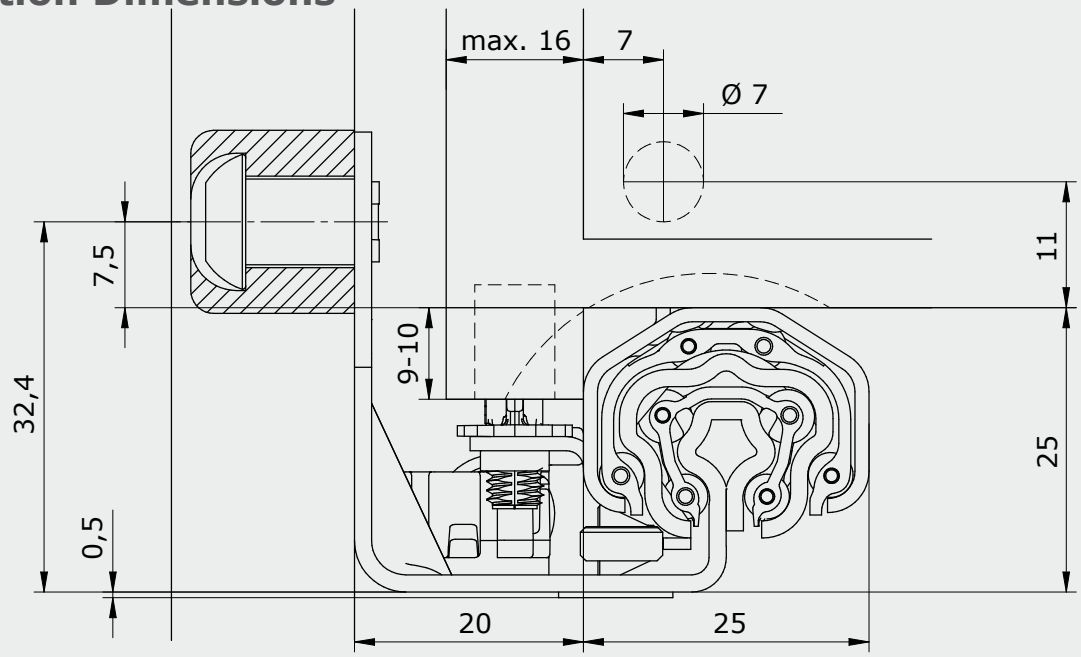

Features

- Star-shaped profile
- Loading capacity up to 25 kg
- Lengths from 250 to 550 mm
- Quick plug-on assembly of the drawer
- Stepless height adjustment
- High tracking stability with smooth running
- Perfect height and lateral stability
- With PEANUT® connecting fittings
- Quick and easy assembly
- With soft-close

Drillings and cut-outs

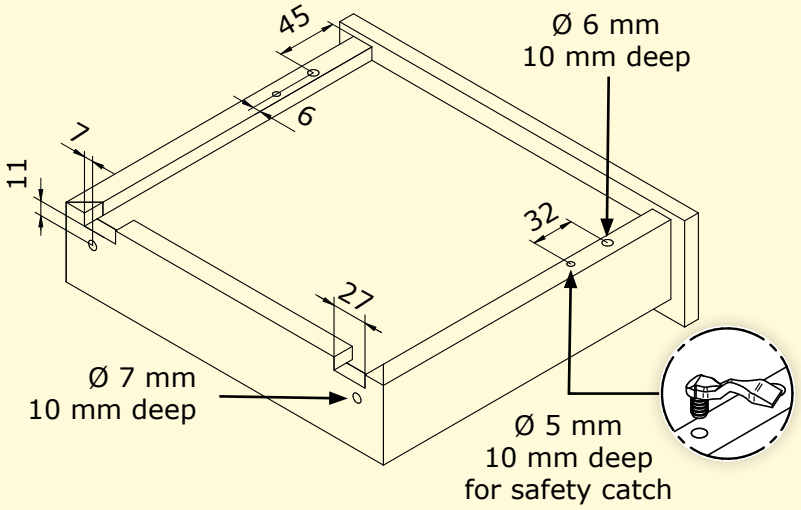

Drawer length in mm	Cabinet runner in mm	Middle runner in mm	Drawer runner in mm	Soft-close	Runners/Box
250	214	214,3	260	x	21
300	246	254,7	310	x	21
350	246	254,7	360	x	21
400	278	254,7	410	x	21
450	310	295,1	460	x	21
500	310	295,1	510	x	21
550	342	375,9	560	x	21

Length and hole pattern of the cabinet runner

Length cabinet runner A	214	246	278	310	342
Peanut hole distance B	128	160	192	224	256

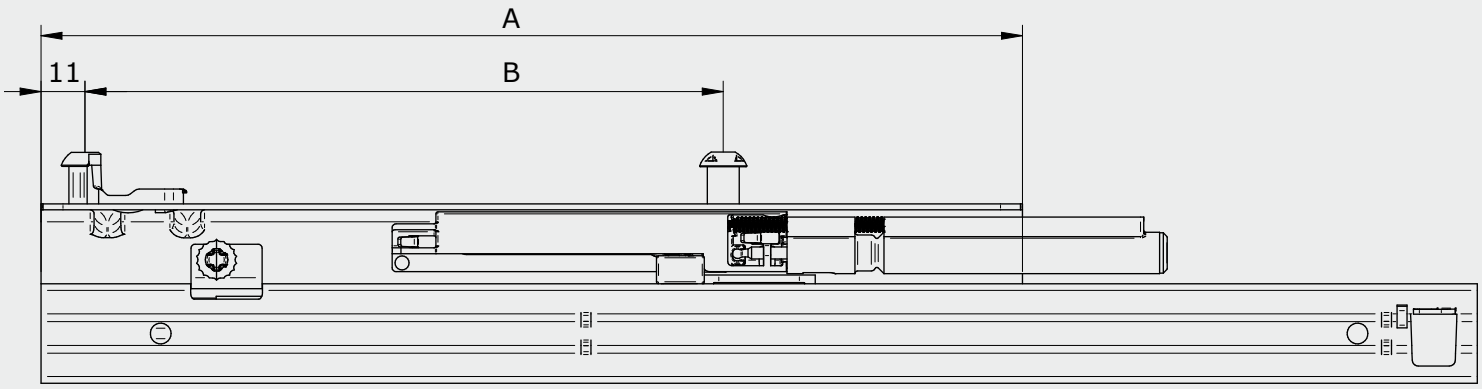

Milling in the cabinet

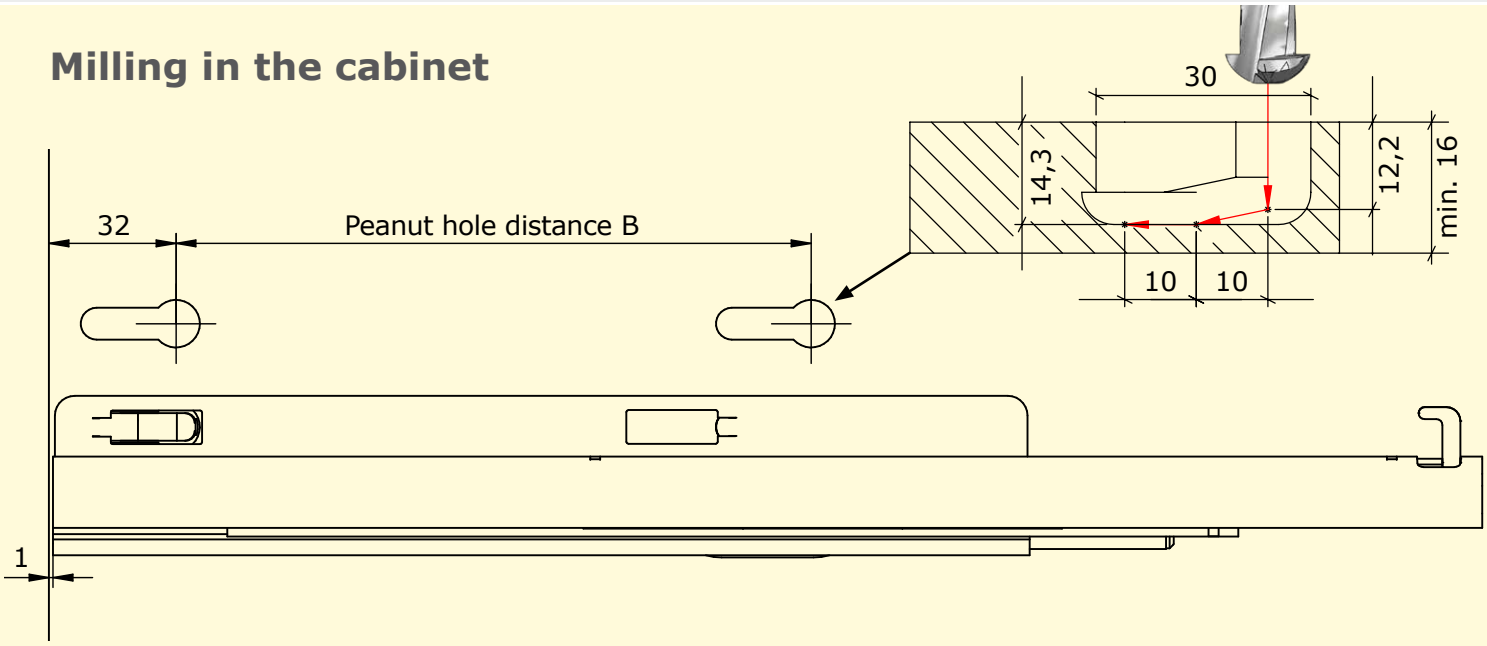

Boxes/Pallet maximum	Pieces/Pallet maximum	Weight/Pallet maximum	Order number left side	Order number right side
48	1008	578	4112502009000	4122502009000
50	1050	695	4113002009000	4123002009000
50	1050	721	4113502009000	4123502009000
35	735	558	4114002009000	4124002009000
35	735	623	4114502009000	4124502009000
30	630	552	4115002009000	4125002009000
30	630	624	4115502009000	4125502009000

Full Extension EXTREME PEANUT®
Soft-close and coupling

Installation Dimensions

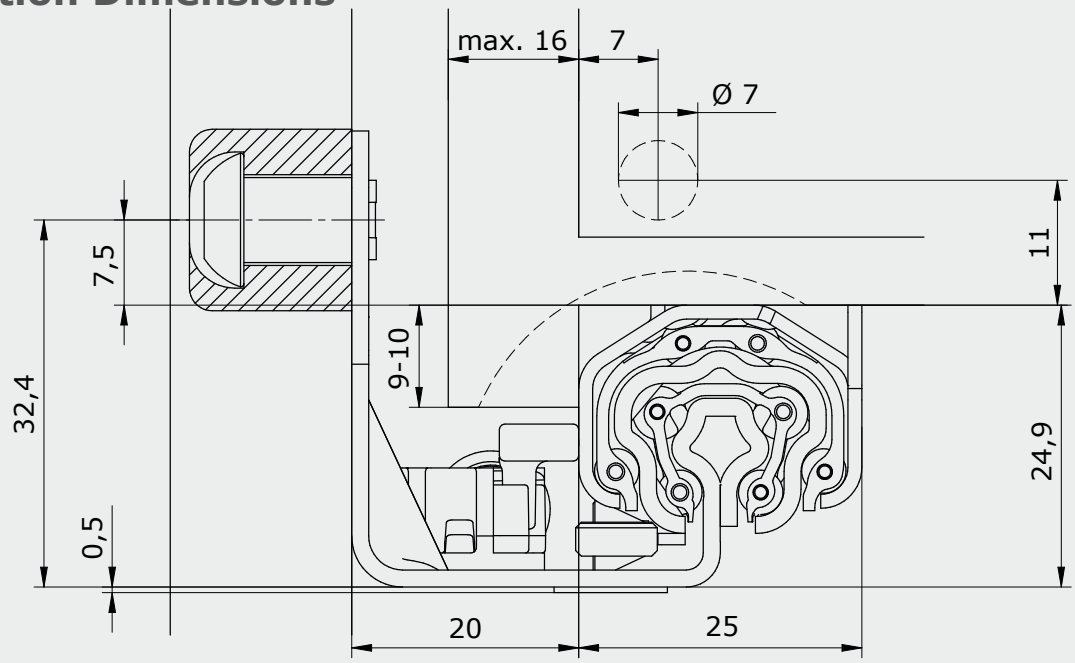

Features

- Star-shaped profile
- Loading capacity up to 25 kg
- Lengths from 250 to 550 mm
- Stepless height adjustment
- High tracking stability with smooth running
- Perfect height and lateral stability
- With PEANUT® connecting fittings
- Quick and easy assembly of the drawer
- With soft-close
- Optionally with 2D or 3D coupling

Coupling technology

With the different coupling options, drawers can be installed and removed in no time. The system combines pull-out protection, coupling and adjustment in a single component. Available in either a 2D version (height and side adjustment) or a 3D version (height, side and depth adjustment). This allows precise and uniform gap alignment to be achieved quickly, easily and without tools.

2D



3D



Drawer length in mm	Cabinet runner in mm	Middle runner in mm	Drawer runner in mm	Soft-close	Runners/Box
250	214	214,3	260	x	21
300	246	254,7	310	x	21
350	246	254,7	360	x	21
400	278	254,7	410	x	21
450	310	295,1	460	x	21
500	310	295,1	510	x	21
550	342	375,9	560	x	21

Length and hole pattern of the cabinet runner

Length cabinet runner A	214	246	278	310	342
Peanut hole distance B	128	160	192	224	256

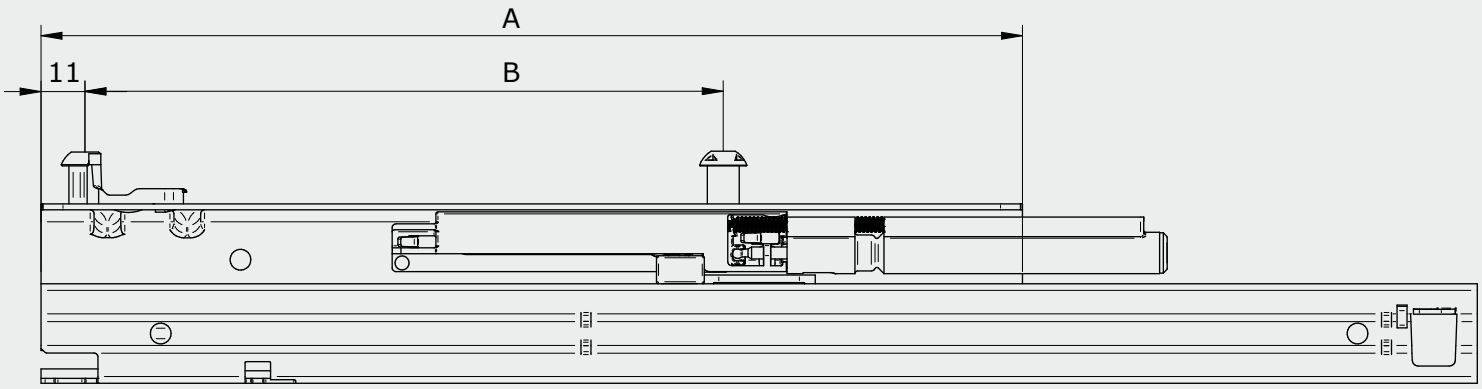

Milling in the cabinet

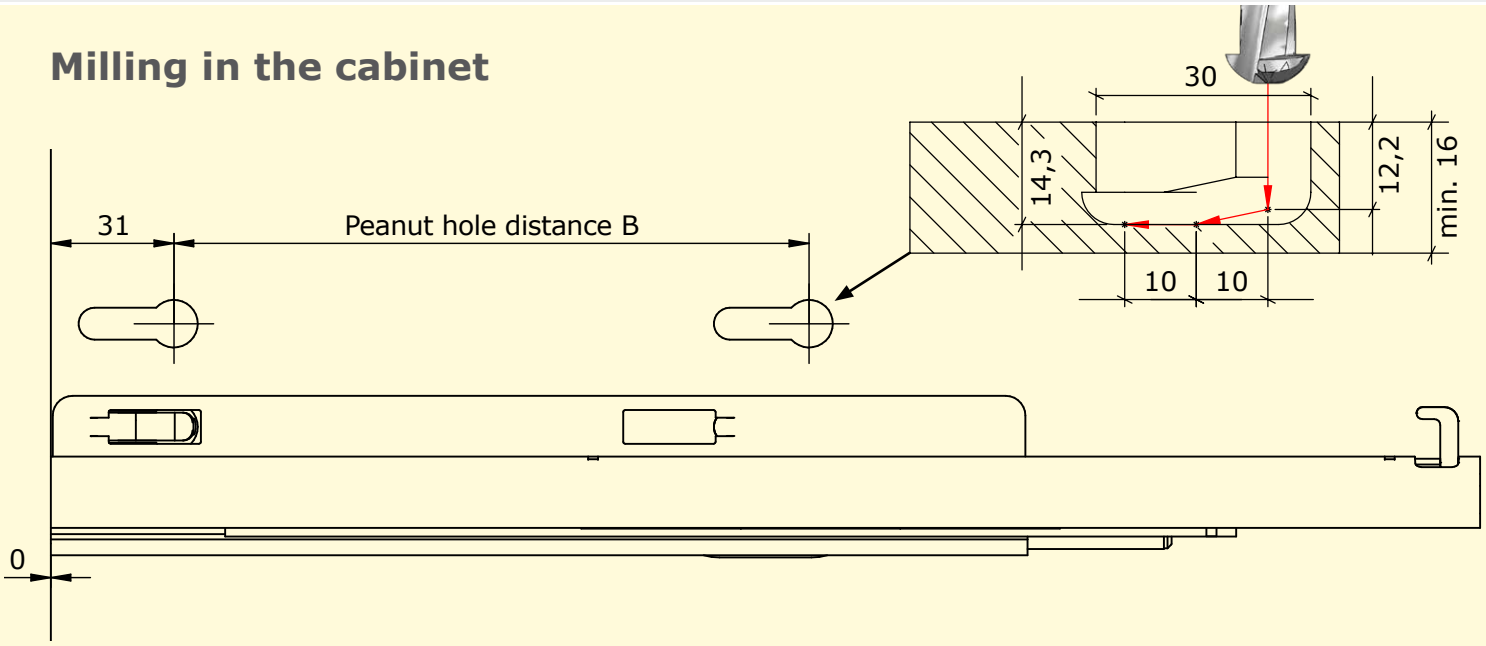

Boxes/Pallet maximum	Pieces/Pallet maximum	Weight/Pallet maximum	Order number left side	Order number right side
48	1008	569	4112502009200	4122502009100
50	1050	691	4113002009200	4123002009100
50	1050	717	4113502009200	4123502009100
35	735	555	4114002009200	4124002009100
35	735	620	4114502009200	4124502009100
30	630	550	4115002009200	4125002009100
30	630	622	4115502009200	4125502009100

Full Extension EXTREME PEANUT®

Push-to-Open and plug-on assembly

Installation Dimensions

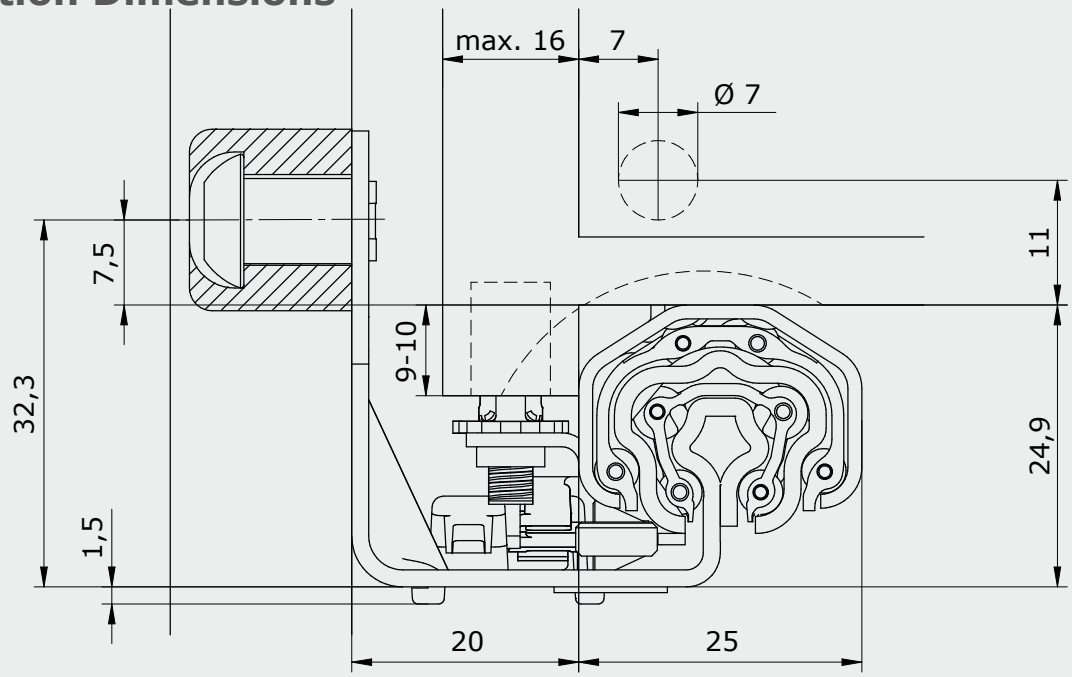

Features

- Star-shaped profile
- Loading capacity up to 25 kg
- Lengths from 250 to 550 mm
- Quick plug-on assembly of the drawer
- Stepless height adjustment
- High tracking stability with smooth running
- Perfect height and lateral stability
- With PEANUT® connecting fittings
- Quick and easy assembly
- Trigger path/reveal gap = 3 mm
- With Push-to-Open

Drillings and cut-outs

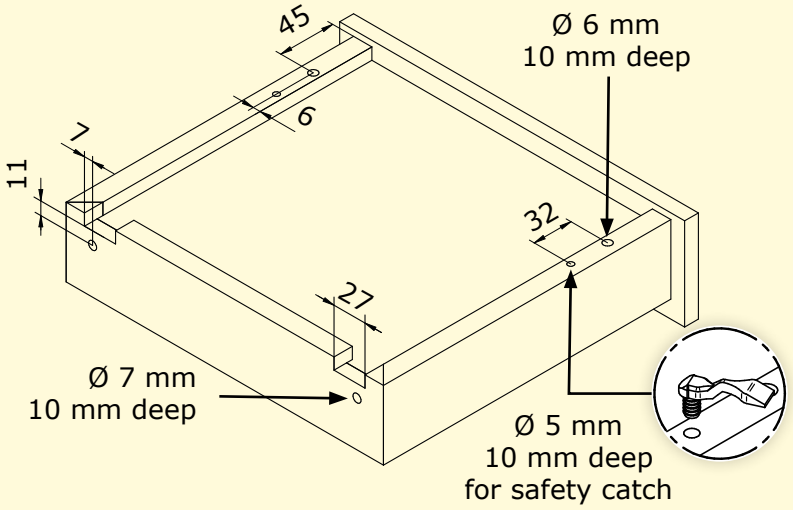

Drawer length in mm	Cabinet runner in mm	Middle runner in mm	Drawer runner in mm	Push-to-Open	Runners/Box
250	214	214,3	260	x	21
300	246	254,7	310	x	21
350	278	254,7	360	x	21
400	310	254,7	410	x	21
450	342	295,1	460	x	21
500	342	295,1	510	x	21
550	406	375,9	560	x	21

Length and hole pattern of the cabinet runner

Length cabinet runner A	214	246	278	310	342	406
Peanut hole distance B	128	160	192	224	256	288

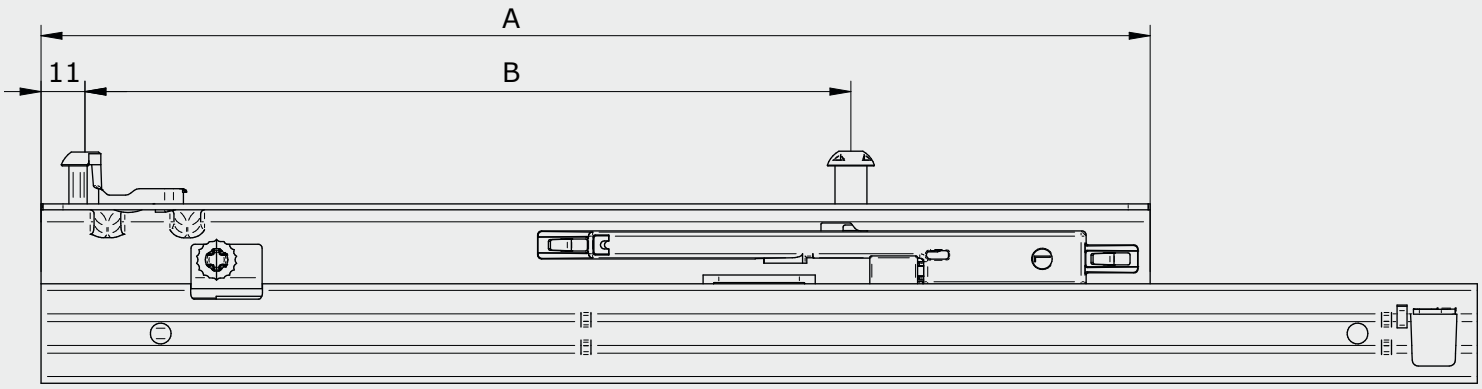

Milling in the cabinet

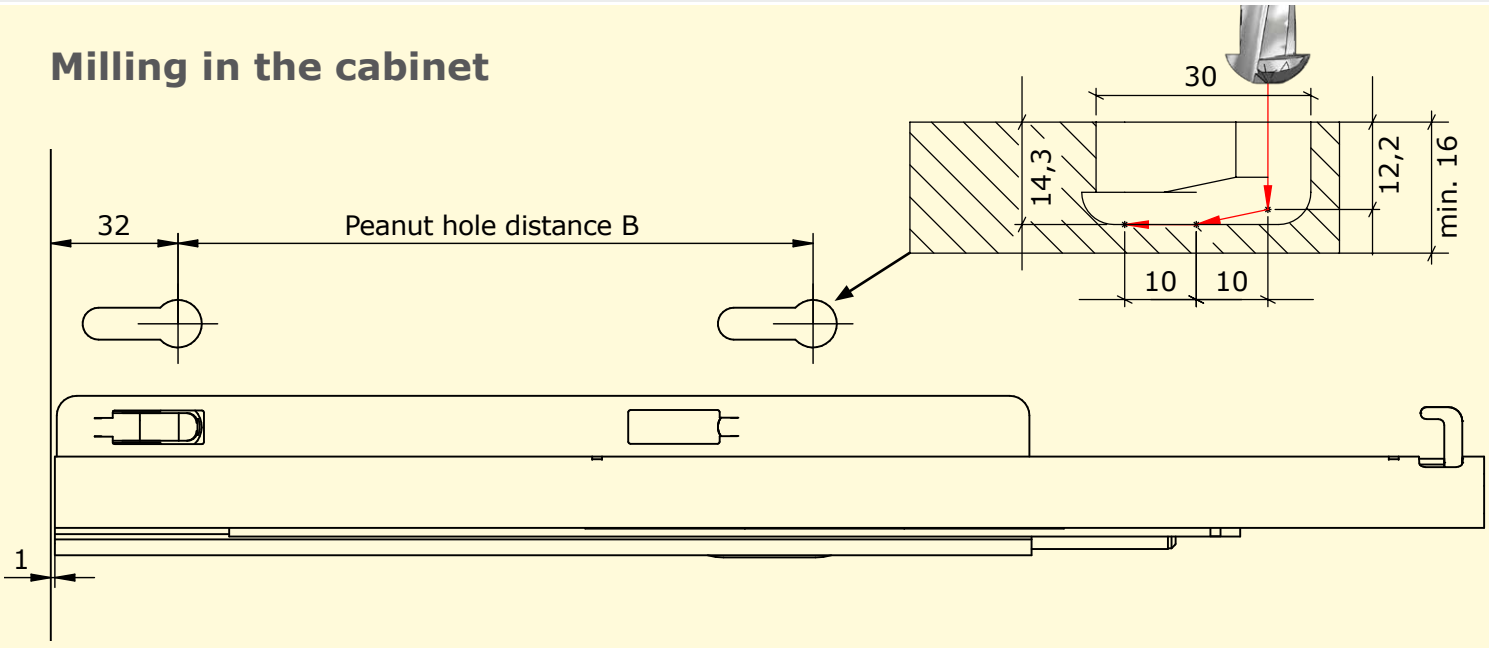

Boxes/Pallet maximum	Pieces/Pallet maximum	Weight/Pallet maximum	Order number left side	Order number right side
48	1008	566	4112503009000	4122503009000
50	1050	683	4113003009000	4123003009000
50	1050	750	4113503009000	4123503009000
35	735	577	4114003009000	4124003009000
35	735	643	4114503009000	4124503009000
30	630	570	4115003009000	4125003009000
30	630	665	4115503009000	4125503009000

Ball bearing runners



Ball bearing runners

17mm groove _____ Page 90-93
27mm groove _____ Page 94-97
37mm groove _____ Page 98-101

Product

Precision slides with ball cage and self-closing mechanism for a 17, 27 and 37 mm drawer groove. Available as single and full extension slides with a maximum load of 10, 15 and 25 kg. Easy to assemble which allows minimal installation effort and thus offers some decisive advantages for customers and their end users.

Request and order

Do you have any questions about our products or would like to have an non-binding offer? Then simply contact us now.
We'll be glad to help you!

Contact form

Ball bearing runners
17 mm groove

Installation Dimensions

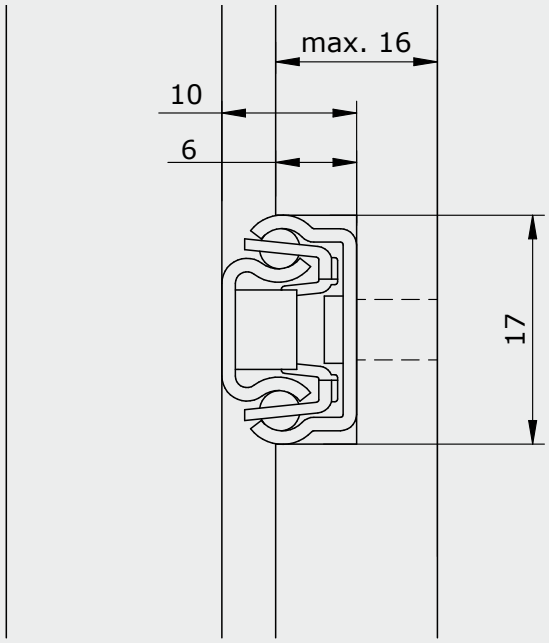

Features

- Narrow installation widths
- Loading capacity up to 10 kg
- Material thickness 1,0 mm
- Good running characteristics
- Quick assembly
- Extremely versatile – for office, living or bedroom
- Customized production possible
- Depending on the quantity of the order we also supply the runners with bracktes of the customer´s choice.

Width	Cabinet runner in mm	Drawer runner in mm	Runners/ Box
17	214	214	180
17	246	246	160
17	278	278	160
17	310	310	160
17	342	342	160

Length and hole pattern of the cabinet runner

Length cabinet runner A	214	246	278	310	342
Hole distance B	160	192	224	256	288

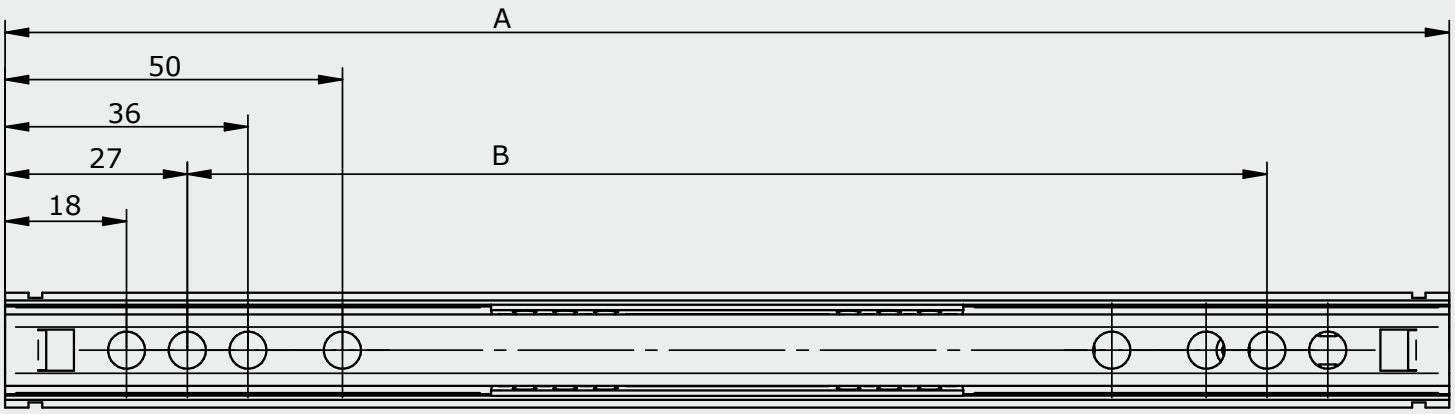

Drillings in the cabinet

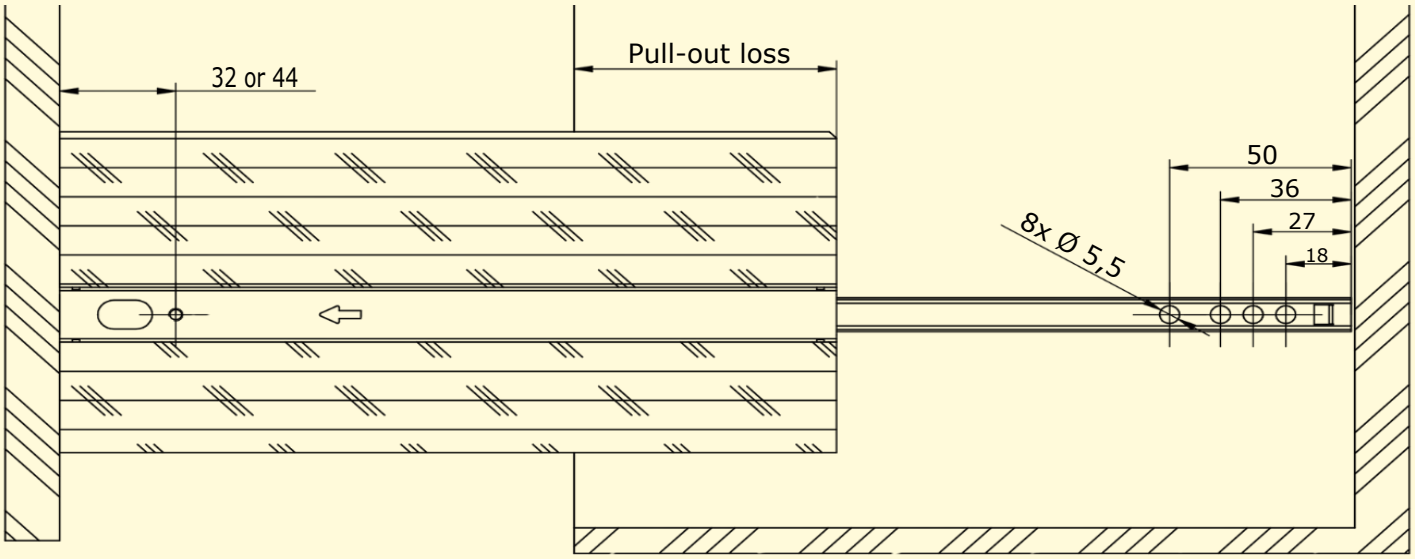

Boxes/Pallet maximum	Pieces/Pallet maximum	Weight/Pallet maximum
48	8640	672
48	7680	744
48	7680	821
48	7680	912
48	4680	1008

Ball bearing runners
17 mm groove

Version



With thread M 4

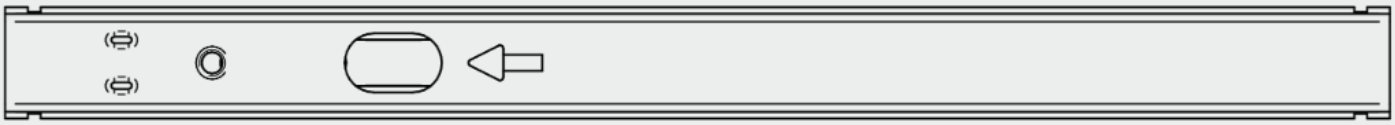

With thread M 4 and K-brake

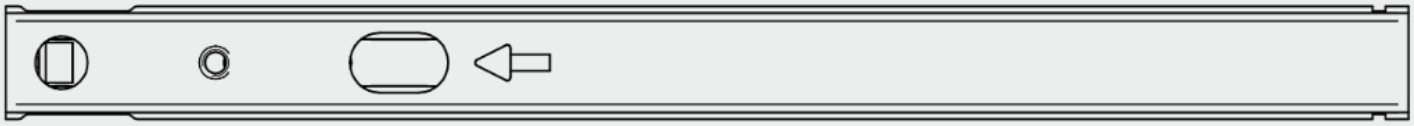

With thread M 4, front support and V-brake

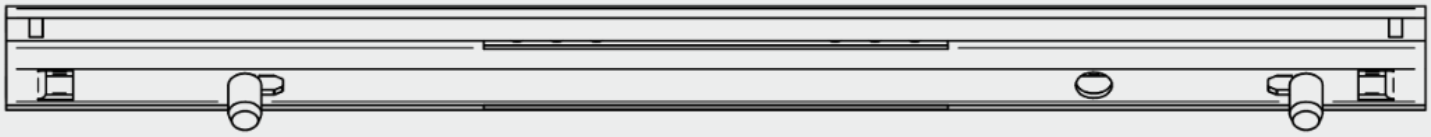

With thread M 4 and dowell

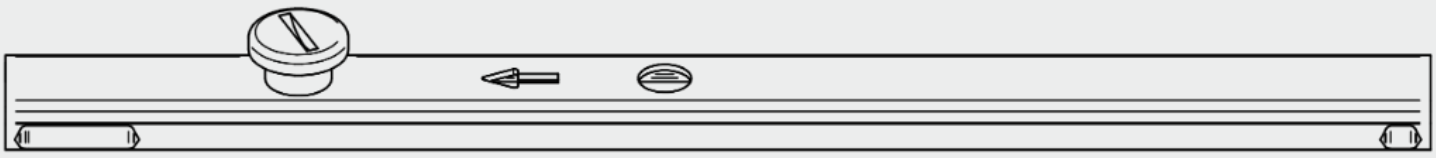

For quick assembly

Ball bearing runners
27 mm groove

Installation Dimensions

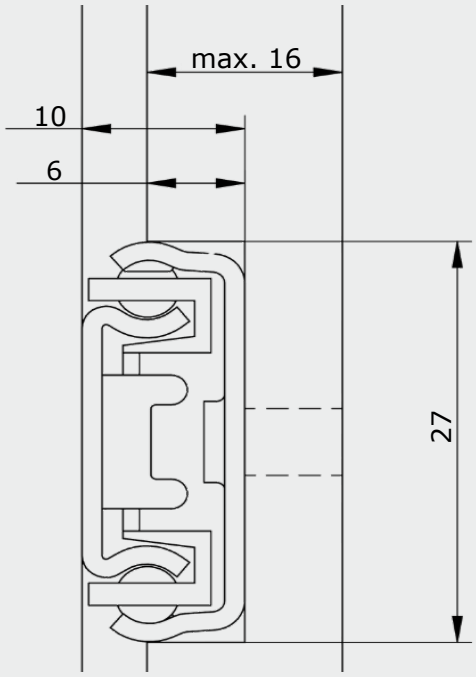

Features

- Narrow installation widths
- Loading capacity up to 15 kg
- Material thickness 1,25 mm
- Good running characteristics
- Quick assembly
- Extremely versatile – for office, living or bedroom
- Customized production possible
- optional self-close

Width	Cabinet runner in mm	Drawer runner in mm	Runners/ Box
27	214	214	140
27	246	246	120
27	278	278	100
27	310	310	100
27	342	342	100

Length and hole pattern of the cabinet runner

Length cabinet runner A	214	246	278	310	342
Hole distance B	160	192	224	256	288



Drillings in the cabinet

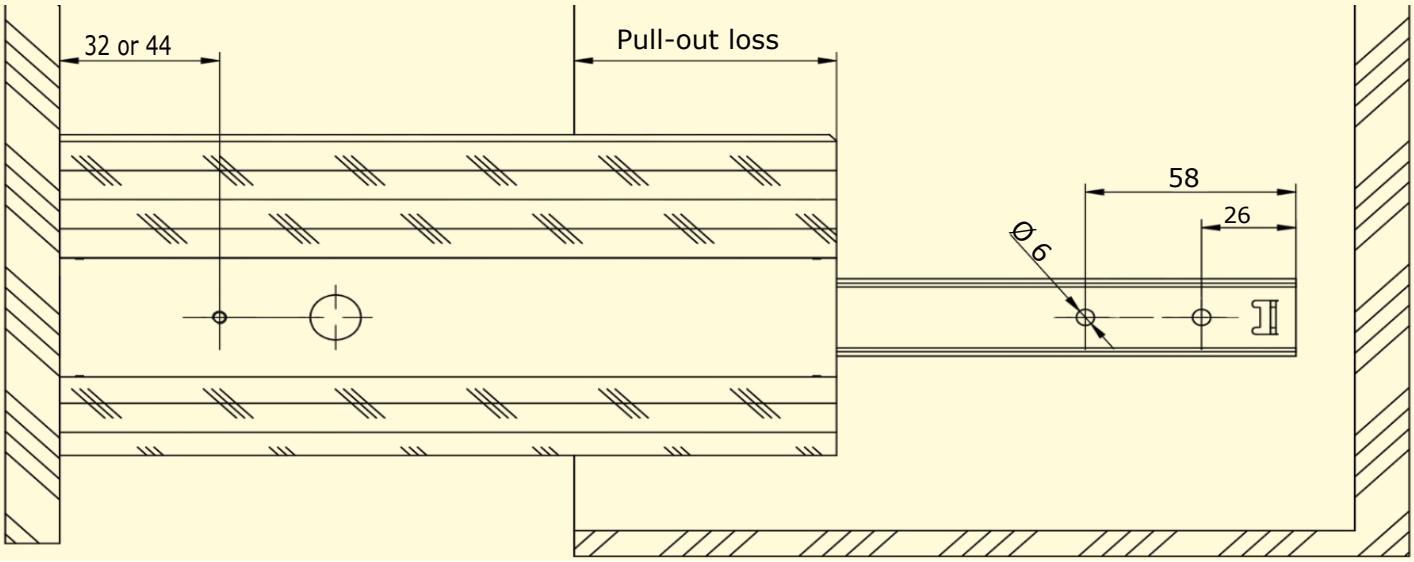

Boxes/Pallet maximum	Pieces/Pallet maximum	Weight/Pallet maximum
48	6720	912
48	5760	903
48	4800	874
48	4800	951
48	4800	1056

Ball bearing runners
27 mm groove

Version

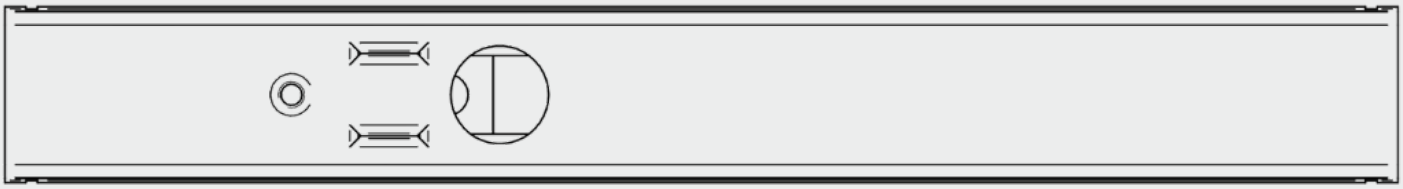

With thread M 4

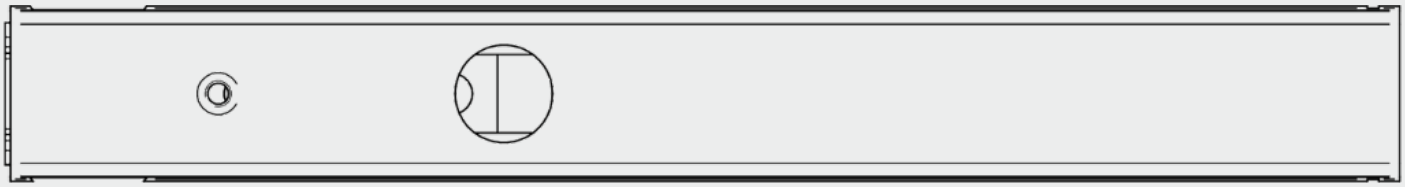

With thread M 4, front support and V-brake

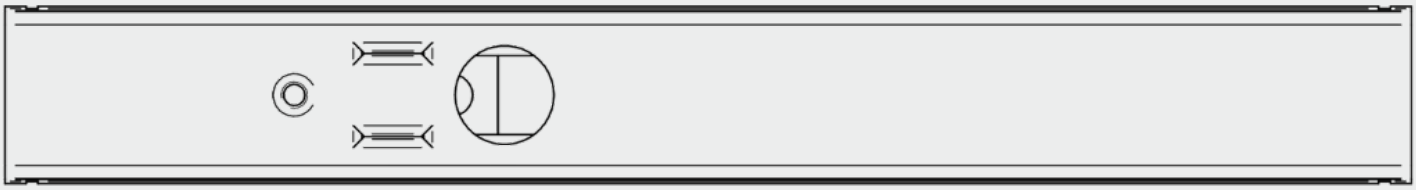

With thread M 4 and K-brake

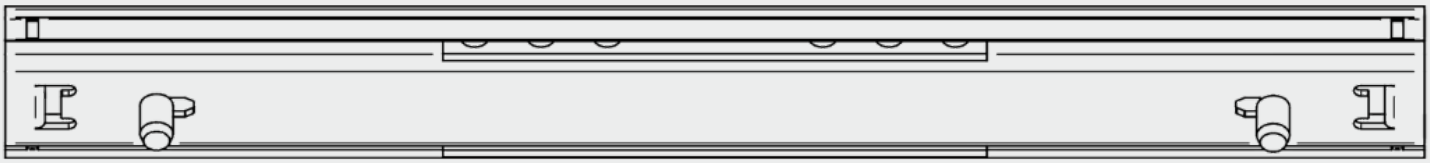

With thread M 4 and dowell

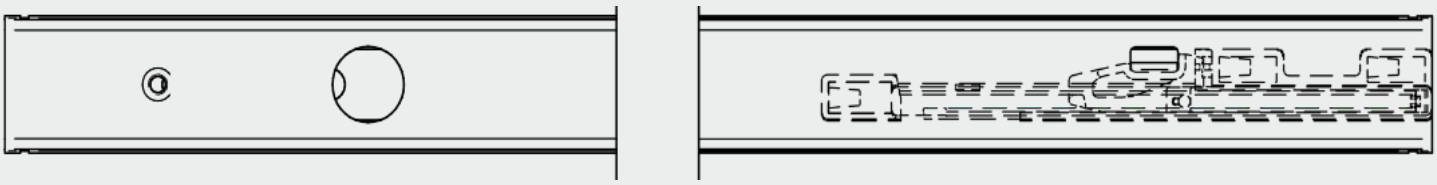

Possible with self-closing from the length 350 mm on

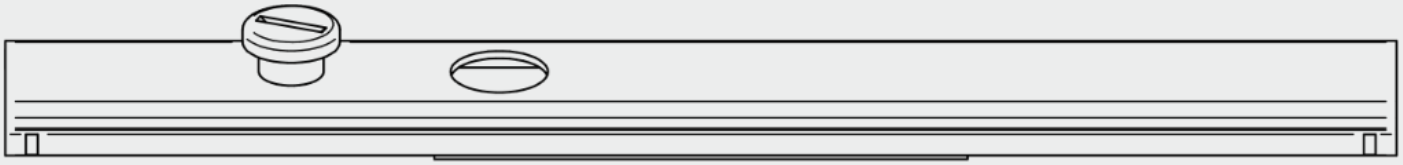

For quick assembly



Two-sided with holes to screw-on

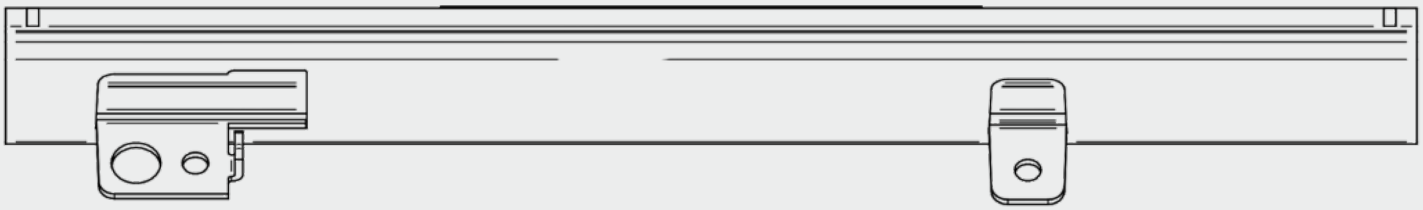

With plug-in assembly

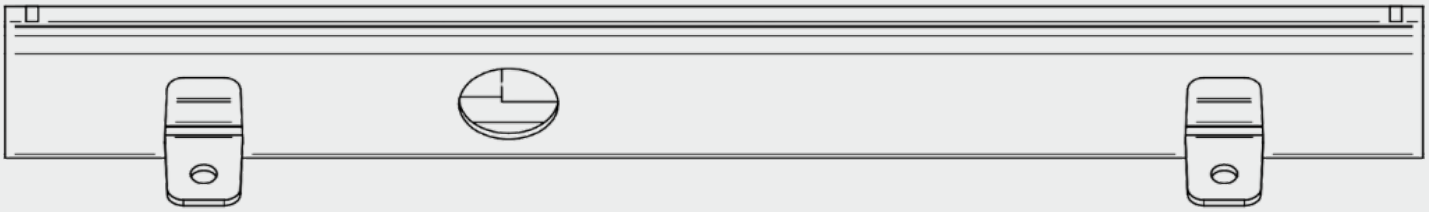

With punching for screwing

Ball bearing runners
37 mm groove

Installation Dimensions

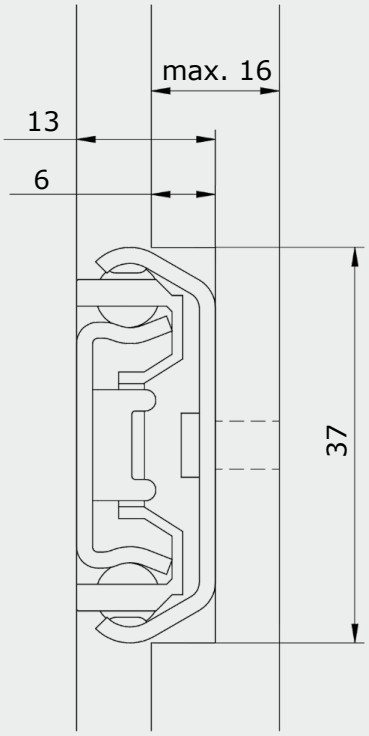

Features

- Narrow installation widths
- Loading capacity up to 25 kg
- Material thickness 1,50 mm
- Good running characteristics
- Quick assembly
- Extremely versatile – for office, living or bedroom
- Customized production possible

Width	Cabinet runner in mm	Drawer runner in mm	Runners/ Box
37	246	246	60
37	278	278	60
37	310	310	60
37	342	342	60

Length and hole pattern of the cabinet runner

Length cabinet runner A	214	246	278	310	342
Hole distance B	160	192	224	256	288

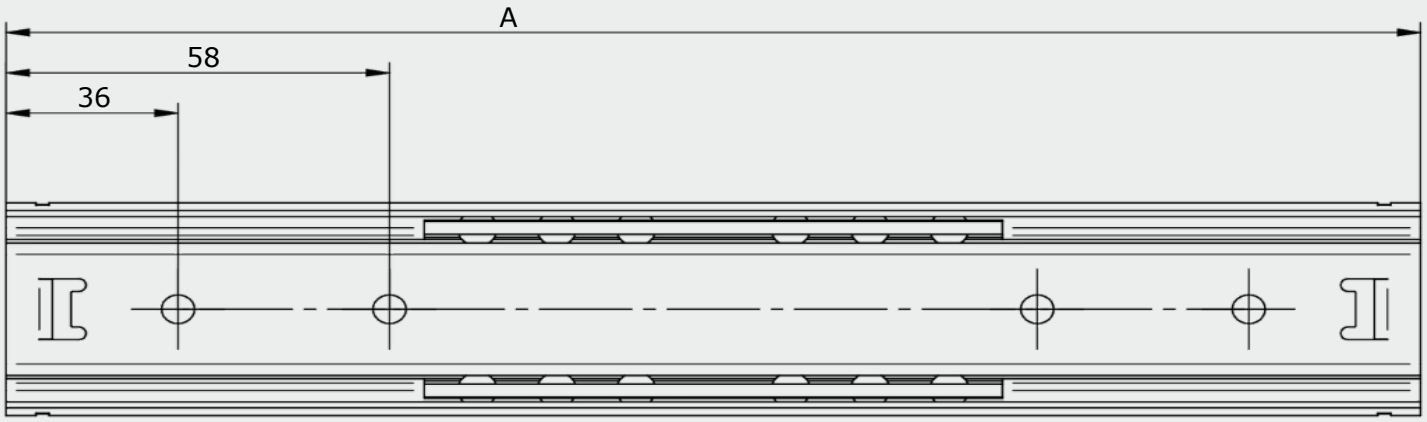

Drillings in the cabinet

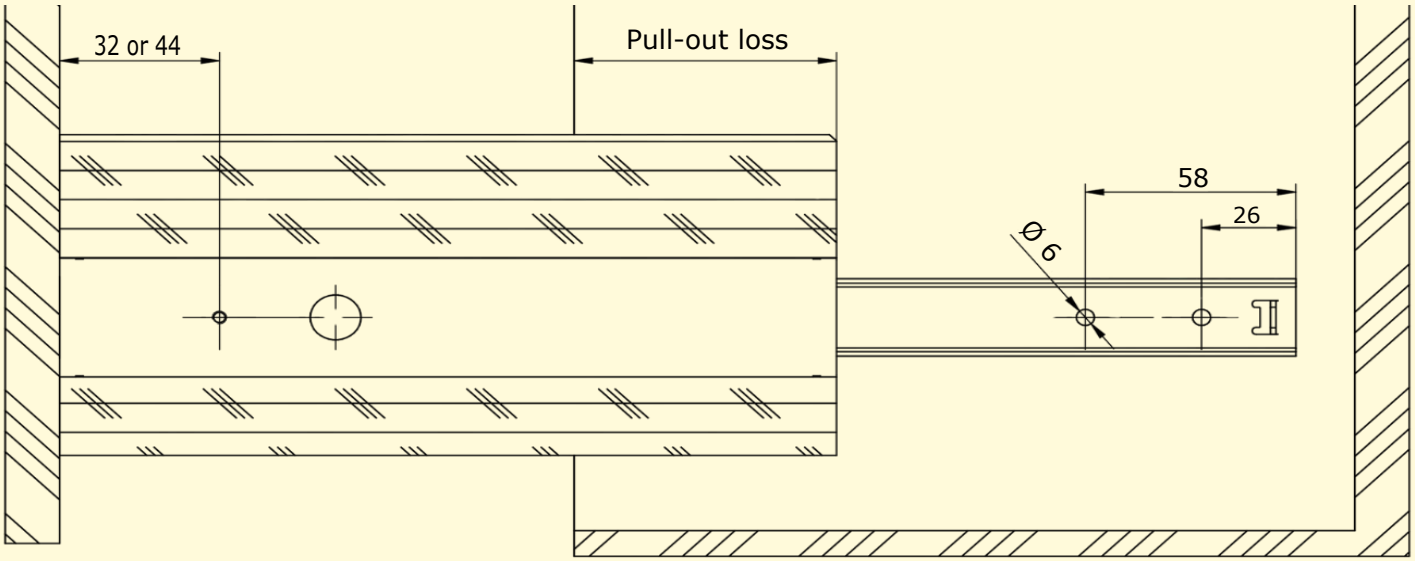

Boxes/Pallet maximum	Pieces/Pallet maximum	Weight/Pallet maximum
48	2880	782
48	2880	874
48	2880	965
48	2880	1056

Ball bearing runners
37 mm groove

Version

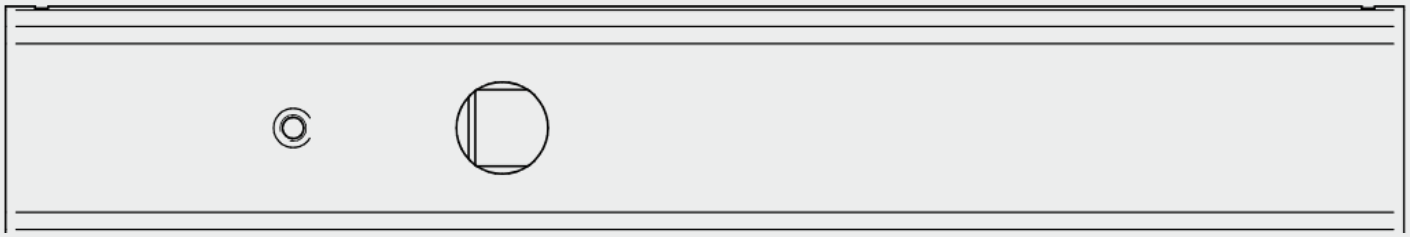

With thread M 4

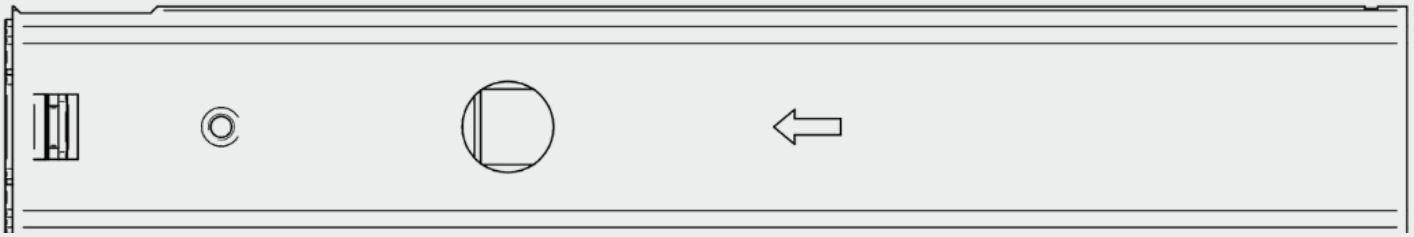

With thread M 4, front support and V-brake

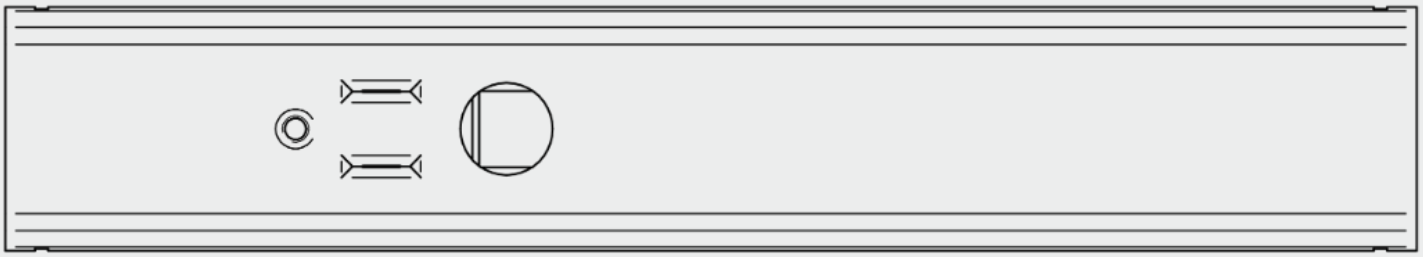

With thread M 4 and K-brake

Assembly instructions



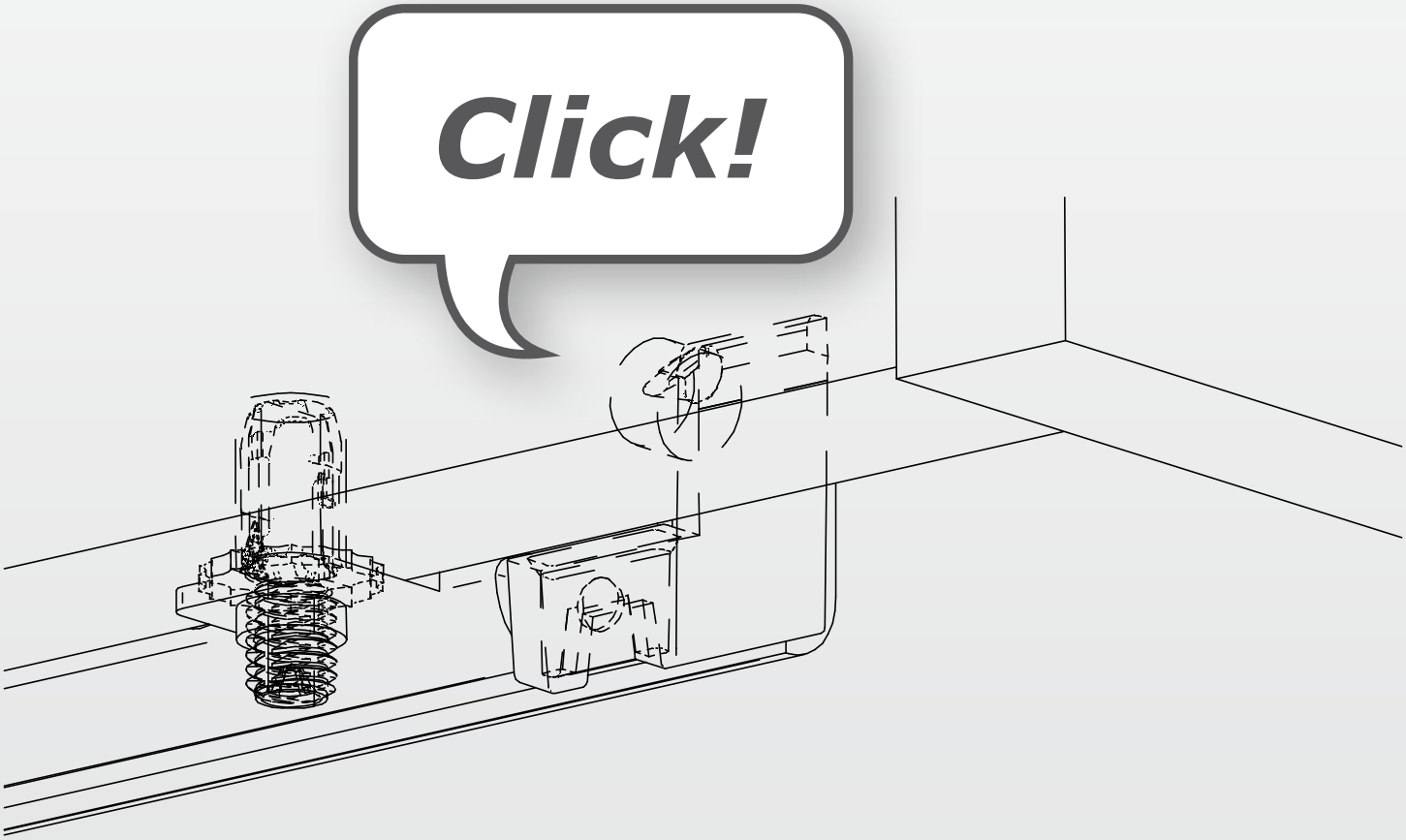

Assembly instructions

Hole patterns and drawser width _____ Page 104
Lift Lock for PERFECT stub version _____ Page 106
Lift Lock for PERFECT _____ Page 108
Lift Lock for EXTREME _____ Page 110
PERFECT/EXTREME PEANUT® _____ Page 112
Coupling for PERFECT/EXTREME _____ Page 114

Product

Our products can be installed in just a few simple steps. The easy-to-understand instructions ensure that even consumers with no previous knowledge can install them effortlessly.

Hole patterns and drawer width

Hole patterns

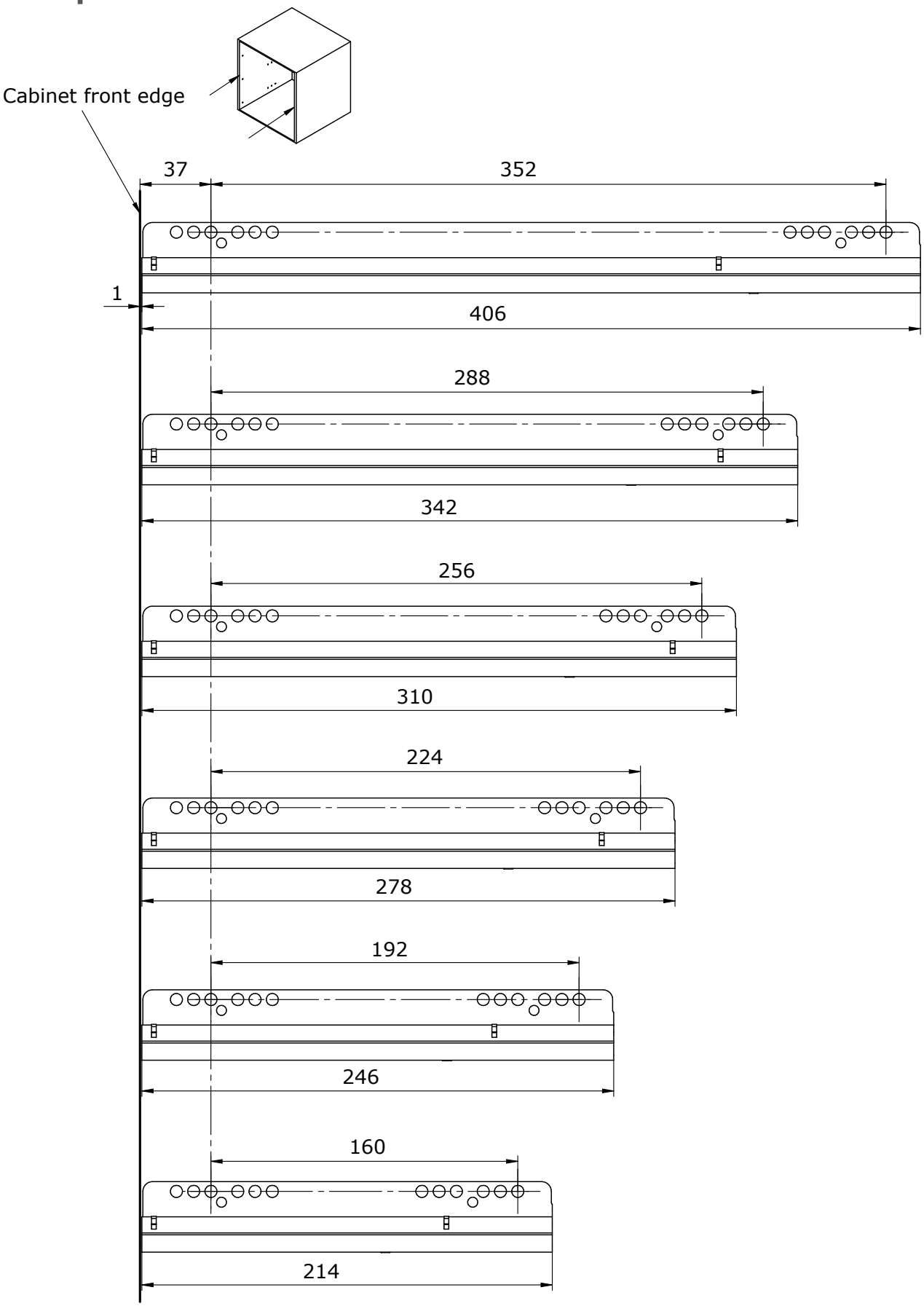

Reveal gap

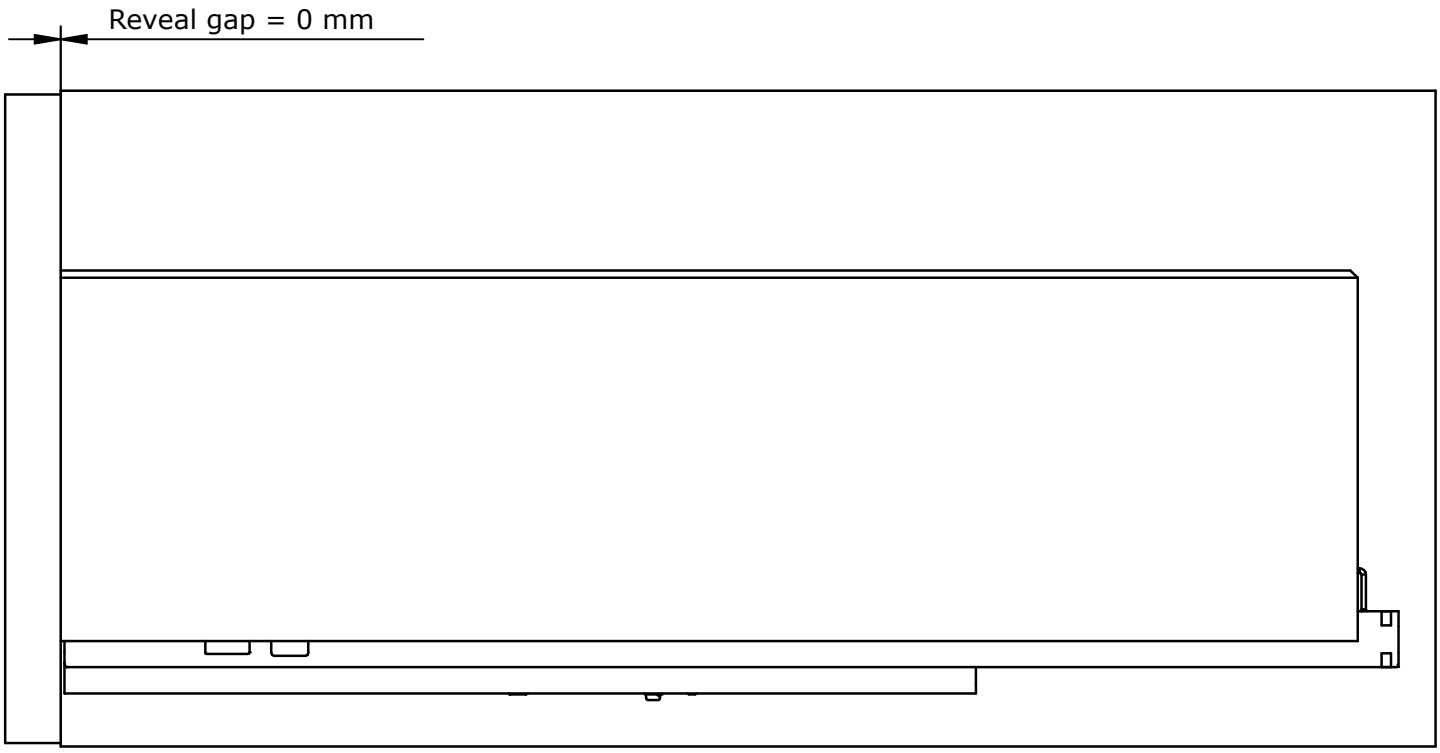

Inside drawer width

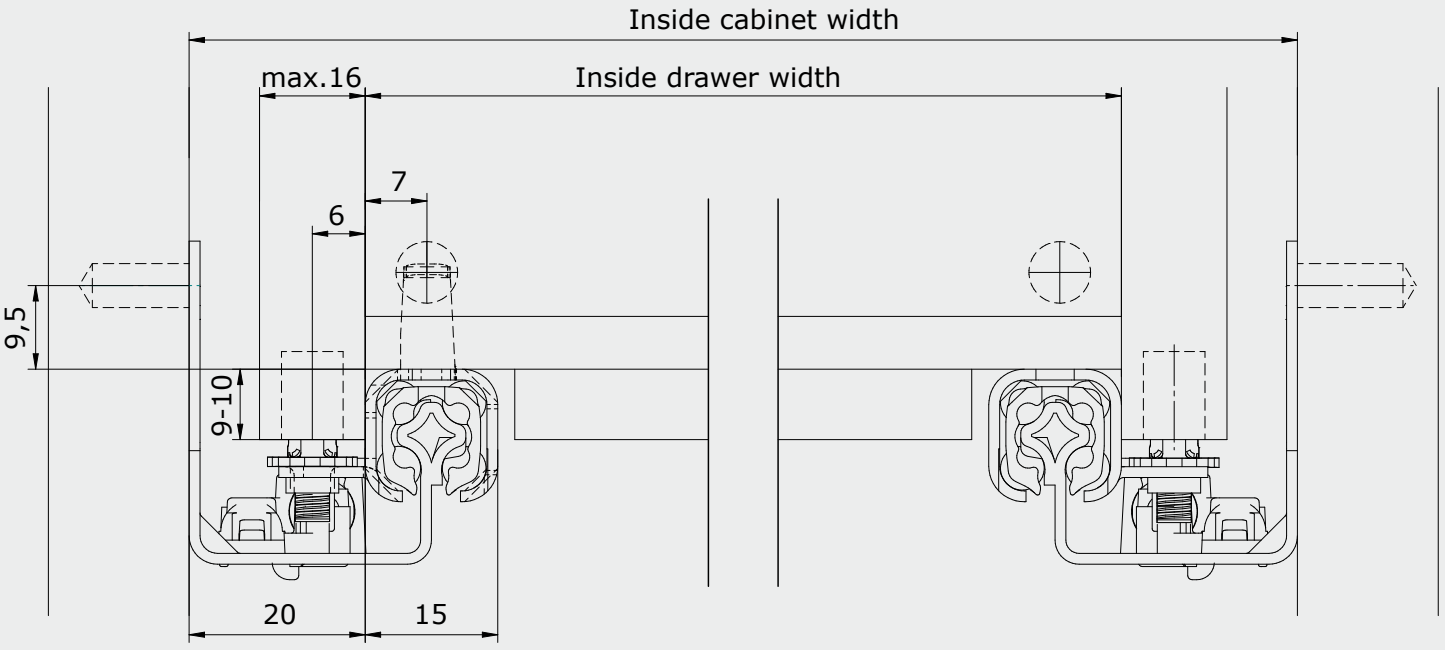

Example calculation
Inside drawer width = Inside cabinet width - 40 mm

Assembly instructions

Drillings and cut-outs in drawer

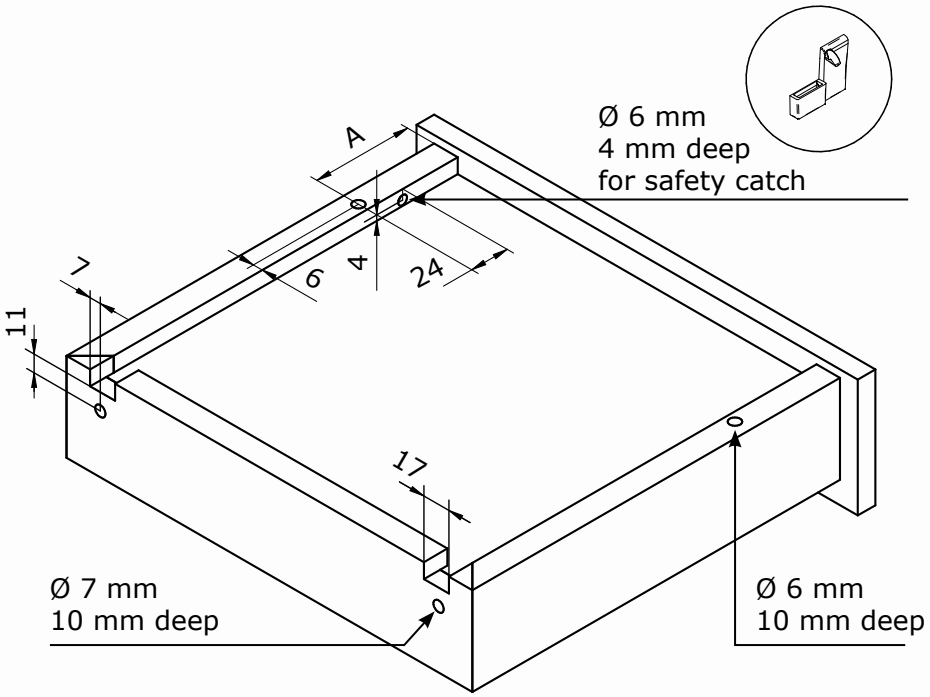

Mounting holes

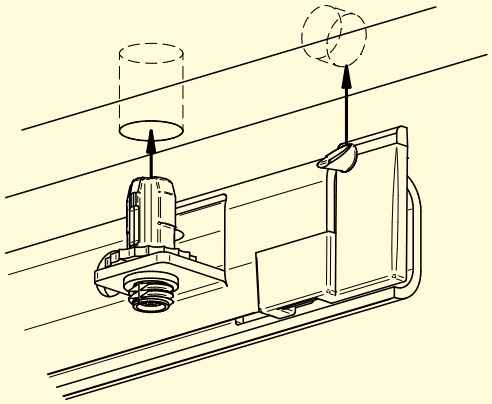

Installation dimensions for drawer

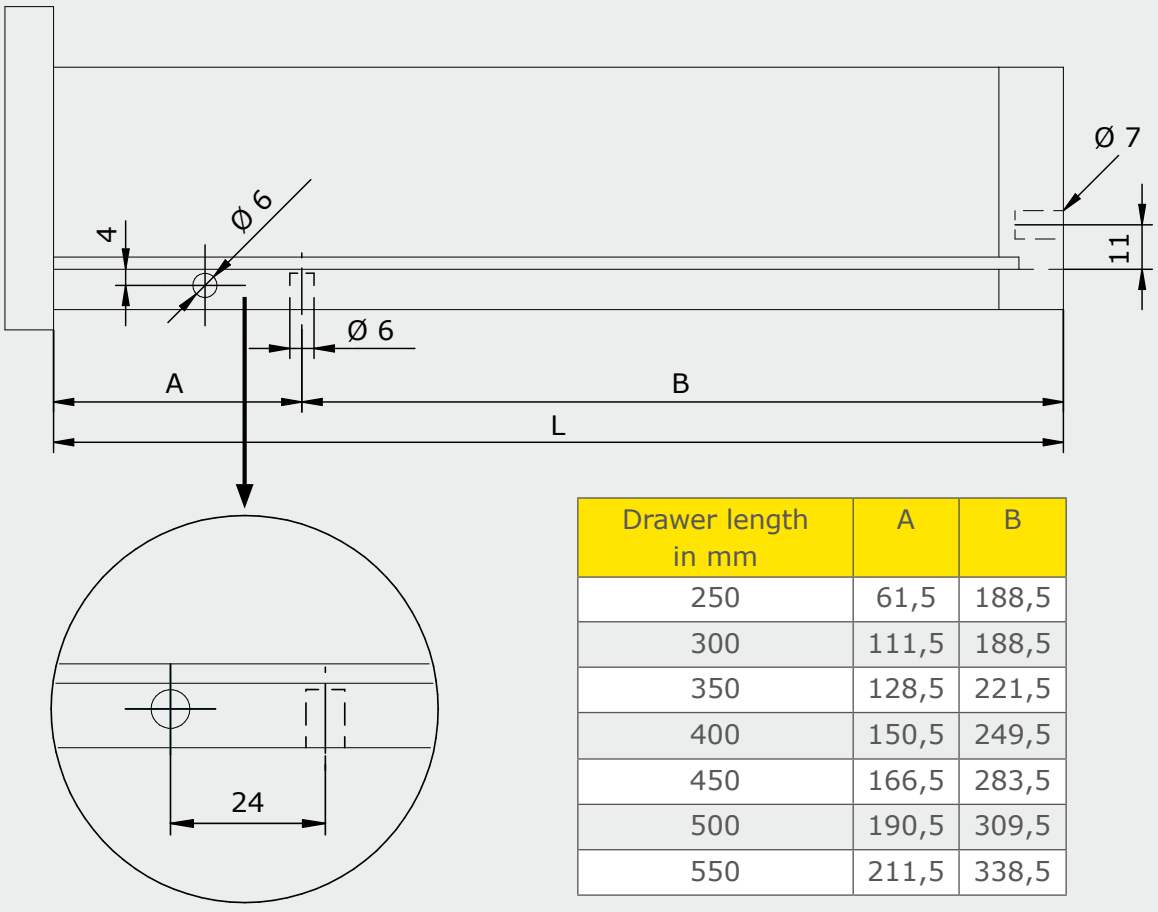

Drawer length in mm	A	B
250	61,5	188,5
300	111,5	188,5
350	128,5	221,5
400	150,5	249,5
450	166,5	283,5
500	190,5	309,5
550	211,5	338,5

Single Extension PERFECT
Lift Lock for PERFECT stub version

Mounting

1

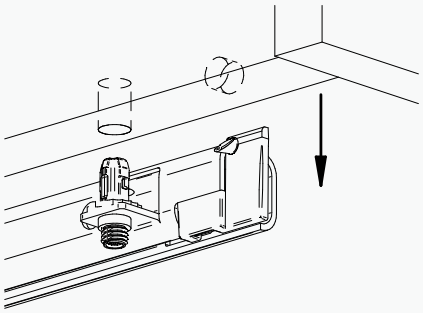

Place the drawer onto the slide. The spring mechanism of the safety catch automatically secures the drawer in place.

2

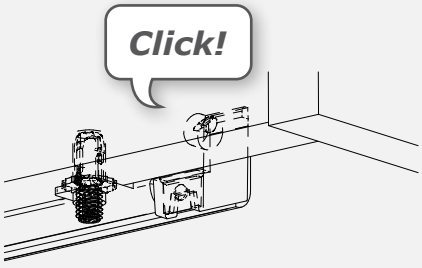

The drawer is locked.

Dismounting

1

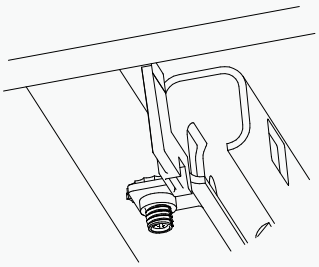

Press the safety catch inward to unlock the drawer.

2

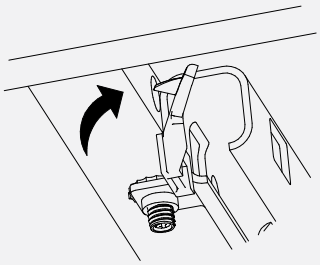

Once the safety catch is no longer engaged in the mounting hole, the drawer can be lifted.

3

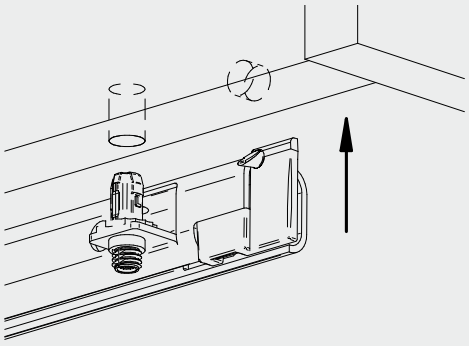

The drawer is now unlocked.

Assembly instructions

Drillings and cut-outs in drawer

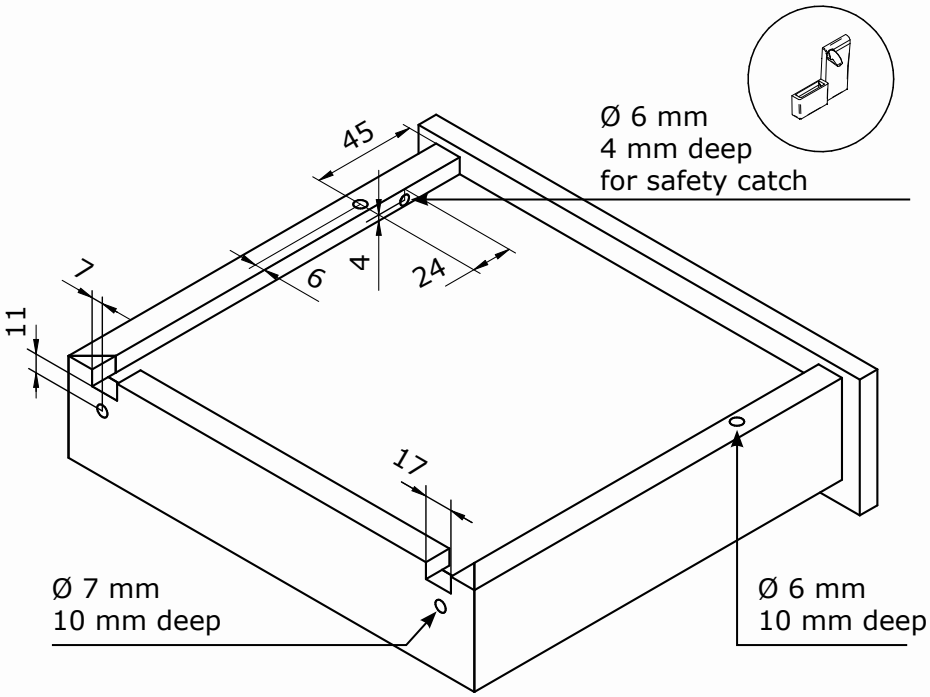

Mounting holes

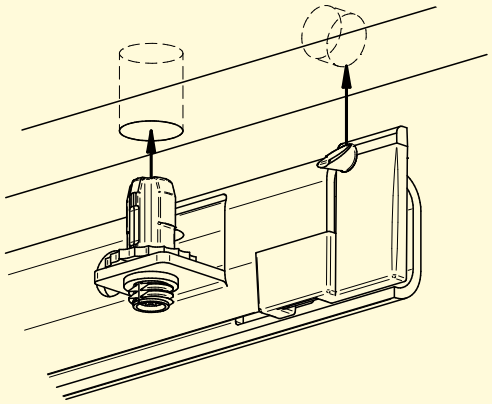

Installation dimensions for drawer

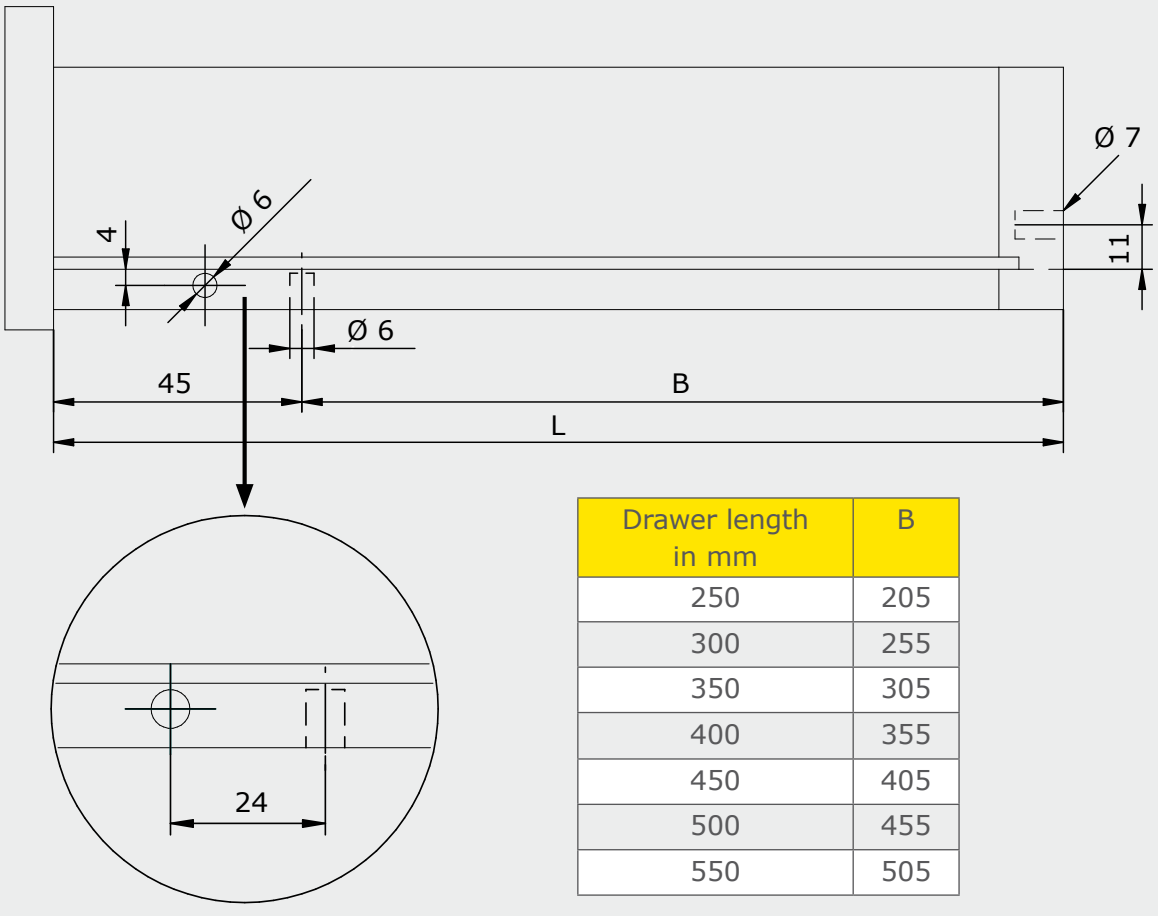

Drawer length in mm	B
250	205
300	255
350	305
400	355
450	405
500	455
550	505

Single Extension PERFECT
Lift Lock for PERFECT

Mounting

1

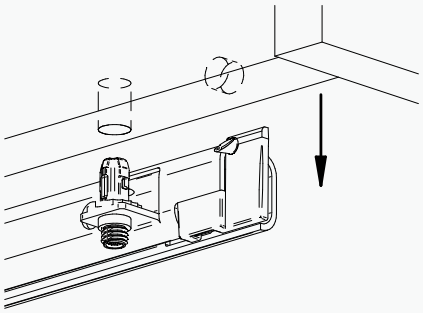

Place the drawer onto the slide. The spring mechanism of the safety catch automatically secures the drawer in place.

2

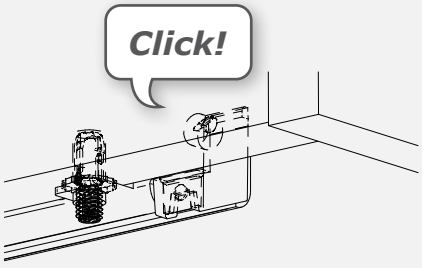

The drawer is locked.

Dismounting

1

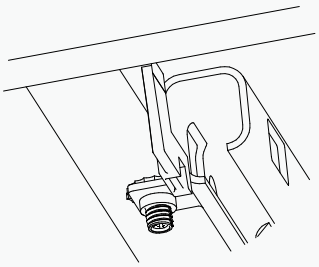

Press the safety catch inward to unlock the drawer.

2

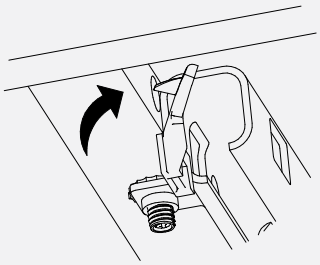

Once the safety catch is no longer engaged in the mounting hole, the drawer can be lifted.

3

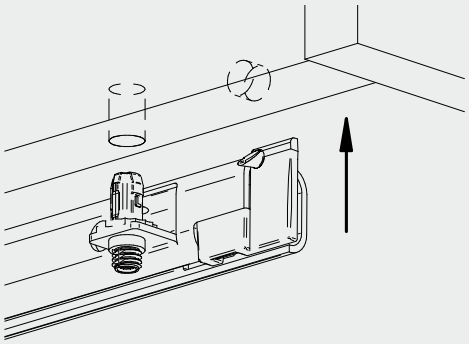

The drawer is now unlocked.

Assembly instructions

Drillings and cut-outs in drawer

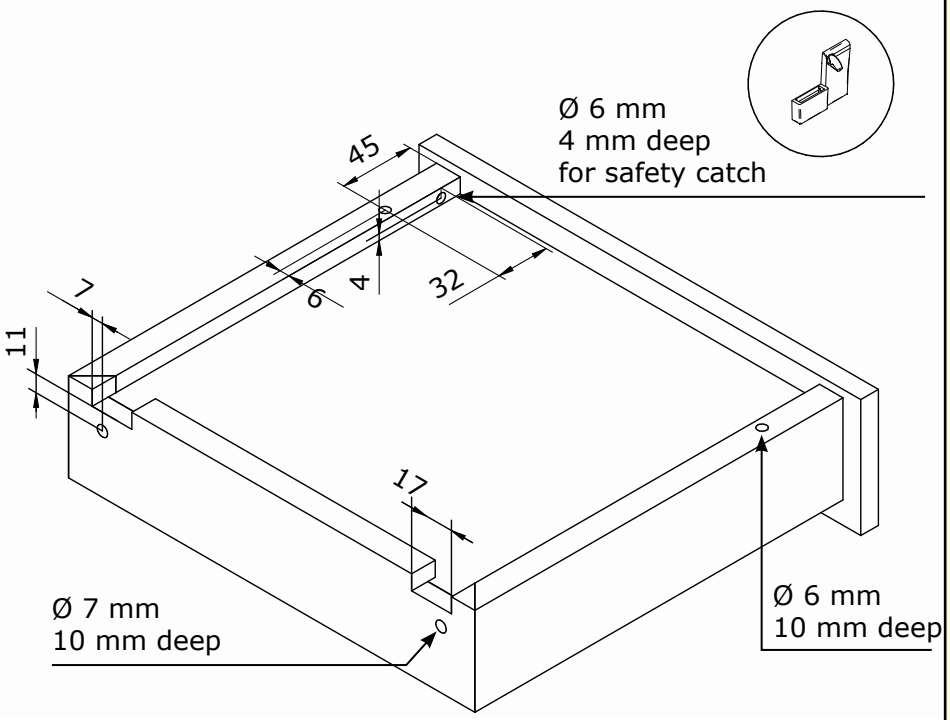

Mounting holes

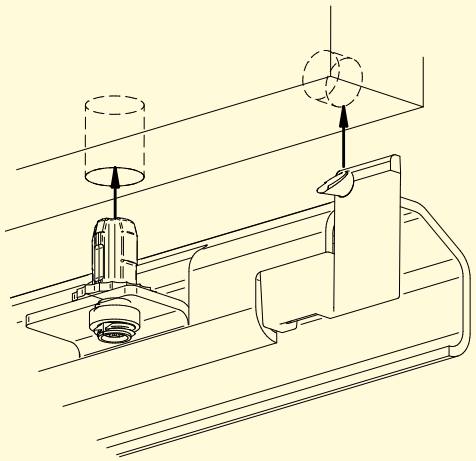

Installation dimensions for drawer

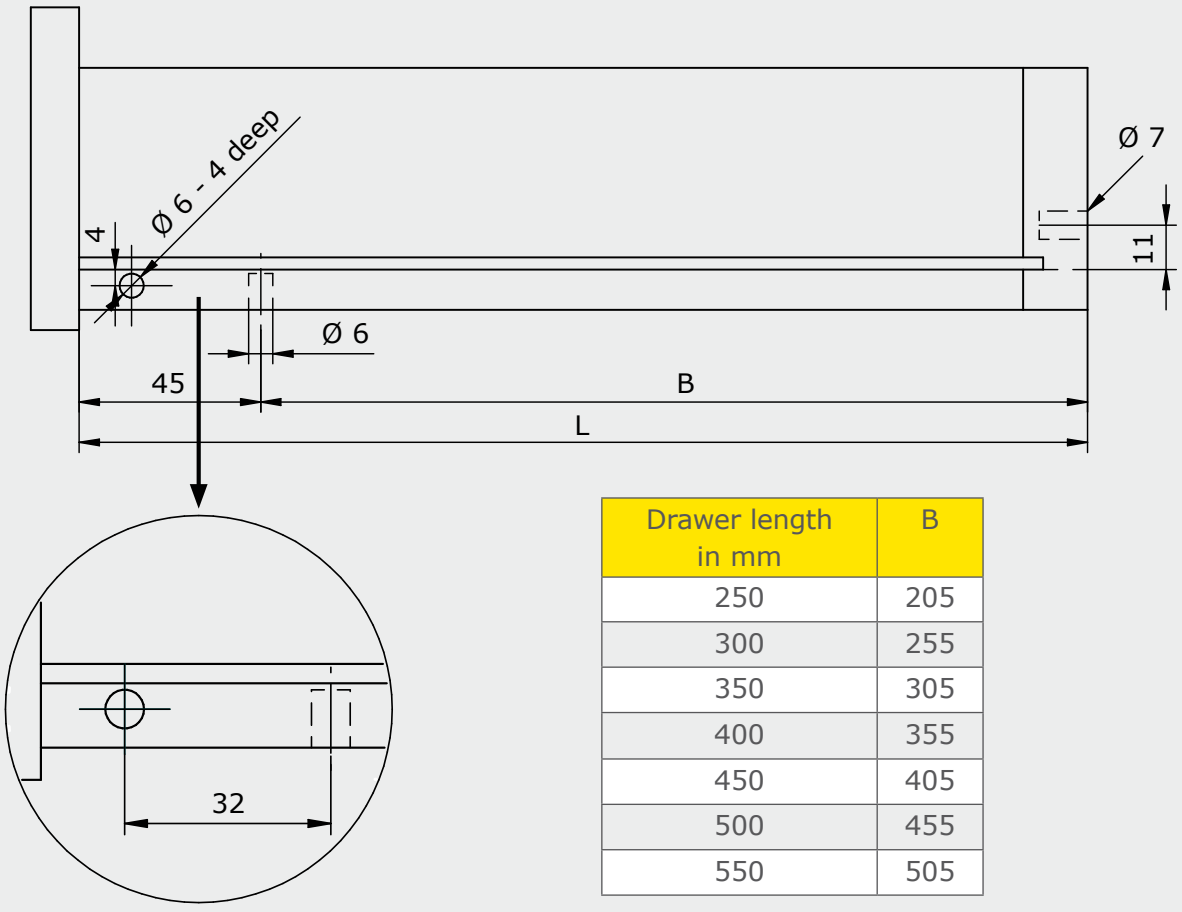

Drawer length in mm	B
250	205
300	255
350	305
400	355
450	405
500	455
550	505

Full Extension EXTREME
Lift Lock for EXTREME

Mounting

1

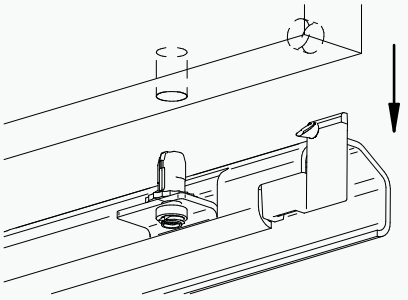

Place the drawer onto the slide. The spring mechanism of the safety catch automatically secures the drawer in place.

2

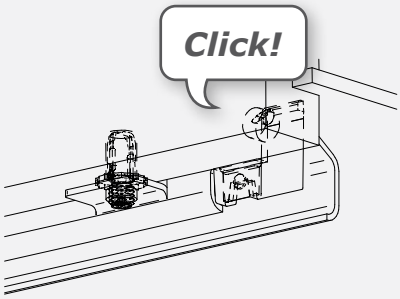

The drawer is locked.

Dismounting

1

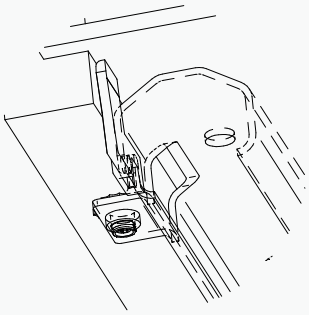

Press the safety catch inward to unlock the drawer.

2

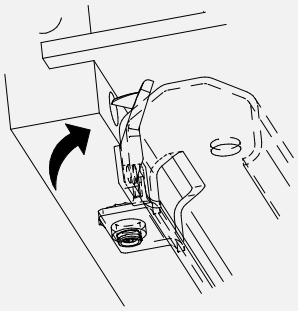

Once the safety catch is no longer engaged in the mounting hole, the drawer can be lifted.

3

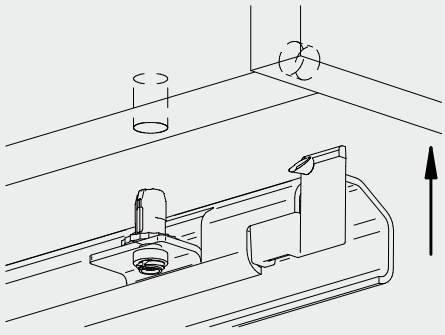

The drawer is now unlocked.

Assembly instructions

Mounting

1

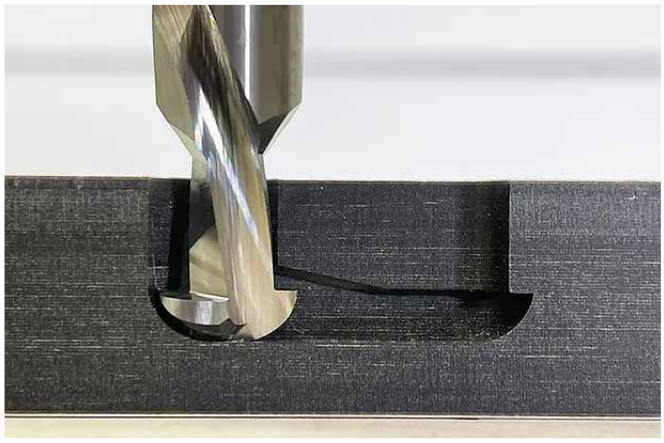

Route the PEANUT®-Slots with the PEANUT® Cutter

2

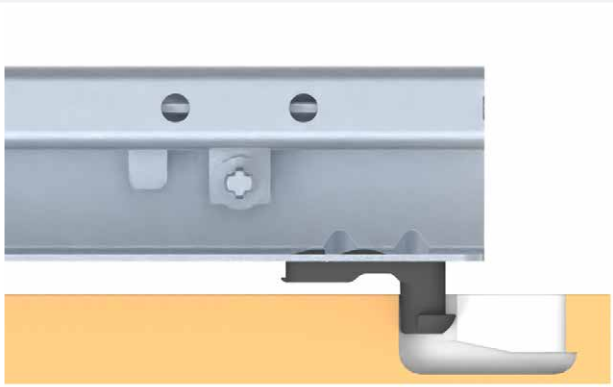

Insert the PERFECT/EXTREME PEANUT® drawer slide into the machined PEANUT® slot.

3

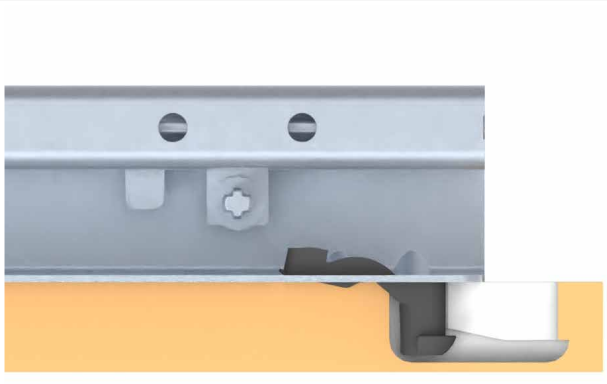

As the PERFECT/EXTREME PEANUT drawer slide is pushed into the PEANUT slot, a clamping connection is formed between the cabinet and the drawer slide.

4

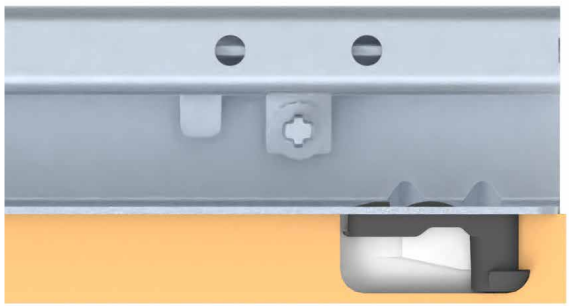

When the end of the PEANUT slot is reached, the PERFECT/EXTREME PEANUT snaps into the slot, locking the drawer slide in place.

5



No tools or screws are required, making the PERFECT/EXTREME PEANUT drawer slide immediately ready for use.

Dismounting

1



Use a small flat object (e.g., a screwdriver) to disengage the lock. Then, the slide can be removed in the direction opposite to the assembly.

Alignment fitting



Alignment fitting

Alignment fitting _____ Page 116

Product

Alignment fittings from REME are used to prevent or even straighten the undesirable warping of sliding doors. By tightening the clamping sleeve, tensile stress is achieved and the door is optimally aligned. Dimensional stability even under high stress guarantees a secure hold for heavily warped doors.

Request and order

Do you have any questions about our products or would like to have an non-binding offer? Then simply contact us now.
We'll be glad to help you!

Contact form

Allignment fitting

Structure

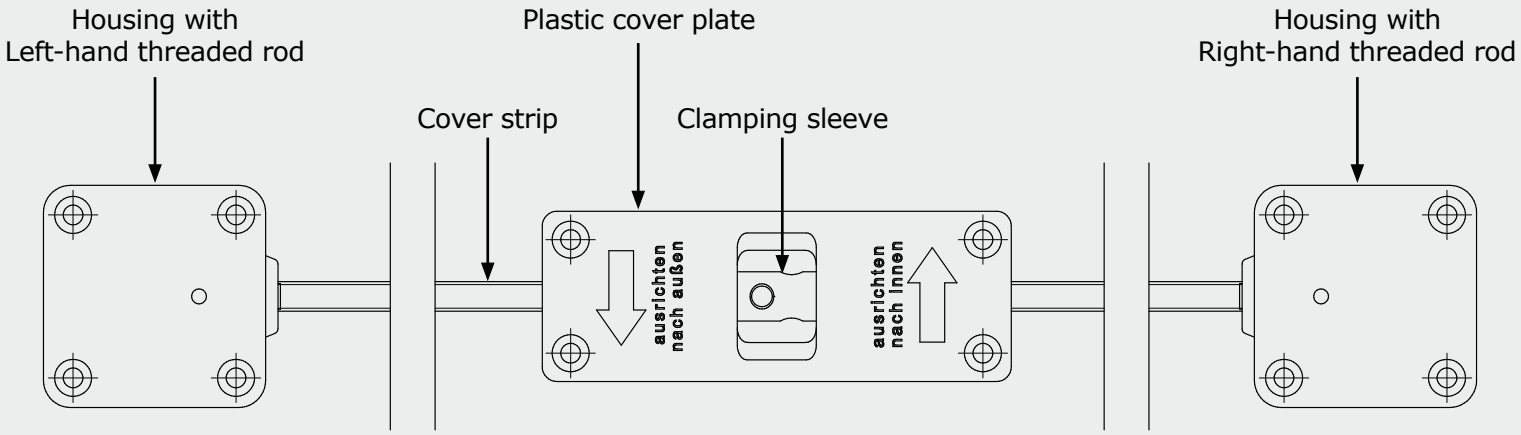

Features

- Supports the functionality of door fittings
- Form stability even with high stress
- Prevents warping of door leaves
- Straighten out warped or distorted doors
- Suitable for wooden and sliding doors

Drilling and milling

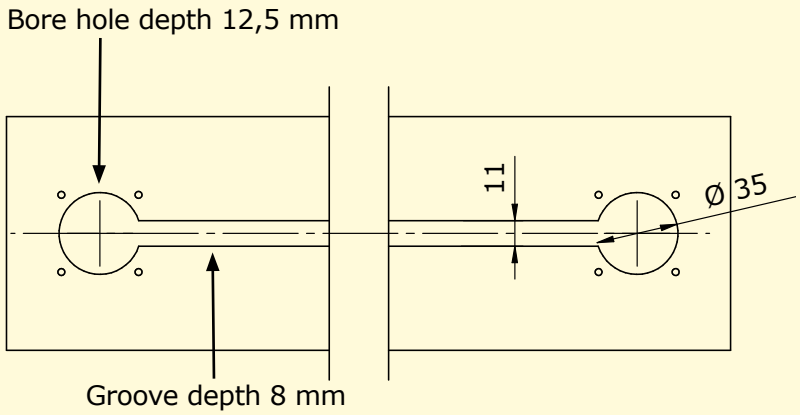

Assembly instruction

By means of the new alignment fitting you`ll be easily able to solve the problem of warping sliding doors. Doors beginning from a wood thickness of 16 mm and up to a height of 2600 mm will be stabilised or corrected by means of this alignment fitting.

Let the housing with the thread rods and sleeves into bore holes (Ø 35 mm and 12,5 mm deep) as well as into a continuous groove (11 mm large and 8 mm deep). Left thread rod and the end of the sleeve with groove in up wards direction. Fasten the housing. Drive in the cover strip and finally screw on the plastic cover plate. Align the door with the steel pin. The direction of rotation is indicated on the cover plate.

Length

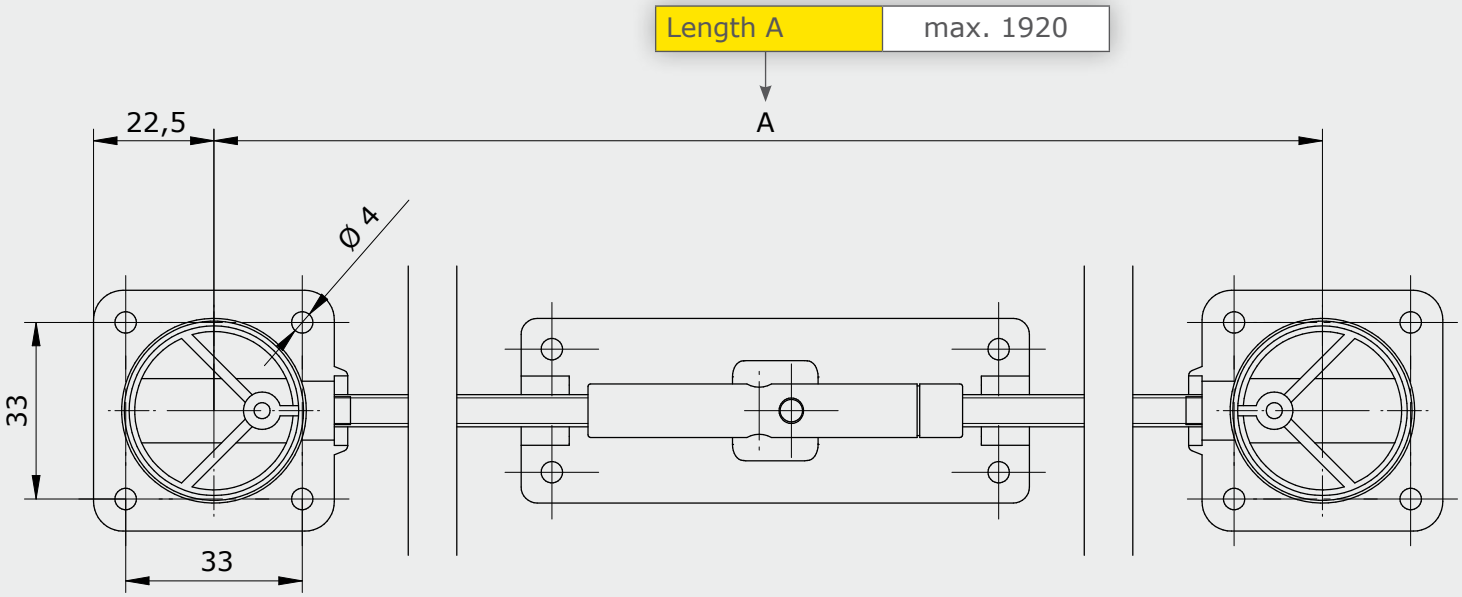

Set contents

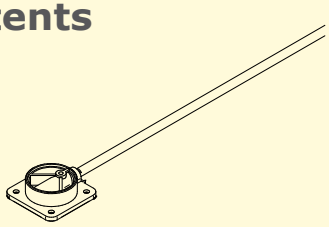

2x Housing
with threaded rod left/right

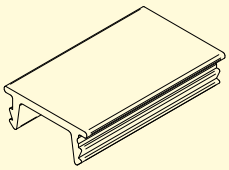

2x Cover plate

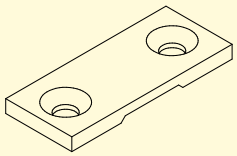

4x Mounting plate

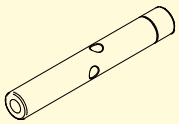

1x Clamping sleeve

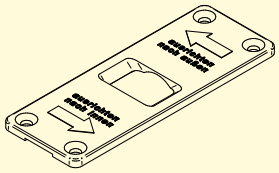

1x Plastic cover plate

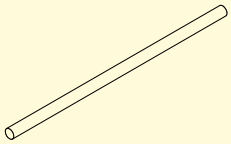

1x Assembly aid

Length	Sets/Box	Box/Palett maximum	Sets/Palett maximum	Order number
individually	25	21	525	individually
1080	25	21	525	2045309011600
1920	25	21	525	2049509011600

Connecting fittings



Connecting fittings

Peanut® 1 _____ Page 120
Peanut® 2 _____ Page 122
Peanut® 2 Short _____ Page 124
Peanut® 3 _____ Page 126
Peanut® 3 Long _____ Page 128
Peanut® Cutters and drills _____ Page 130

Product

REME has taken over the distribution of products from the company Intelligent Fixings throughout Germany. The product portfolio includes connecting fittings which can be assembled partially without tools.

Intelligent Fixings have used the patent-pending technology of the original PEANUT® 1 to develop a range of dowel-like connectors, for use with high-speed production lines and hand-held routers. Since 2023 REME is the distribution partner of Intelligent Fixings for the German sales area.

Find out about the intelligent connection solutions now!

Connecting fittings
PEANUT® 1

Variants

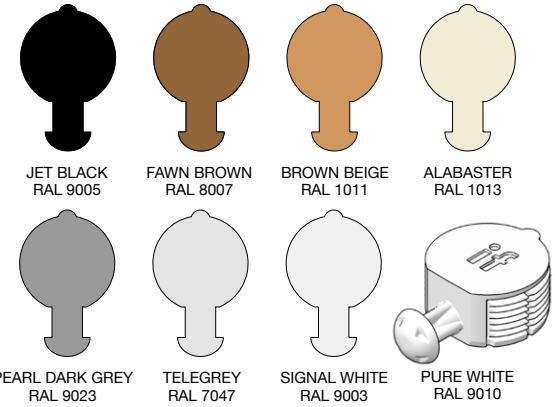

Applications

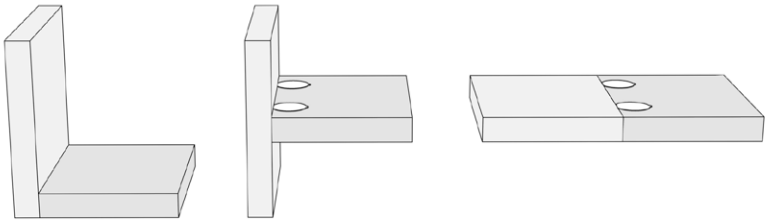

Features

- Self-clinching
  One-component connection
- Creates a strong connection
- Quick and easy assembly
- Can be installed several times
- Available in various colors
- Material: glass-fiber reinforced plastic

Technical specifications

Component composition

Glass-fiber reinforced plastic

Material thikness

90° connection: >15,3 mm

Tolerance (Ø 25 mm hole)

+0,1 mm und -0,25 mm

Tolerance (Cutter slot)

+0,3 mm und -0,4 mm (depth)

Machining

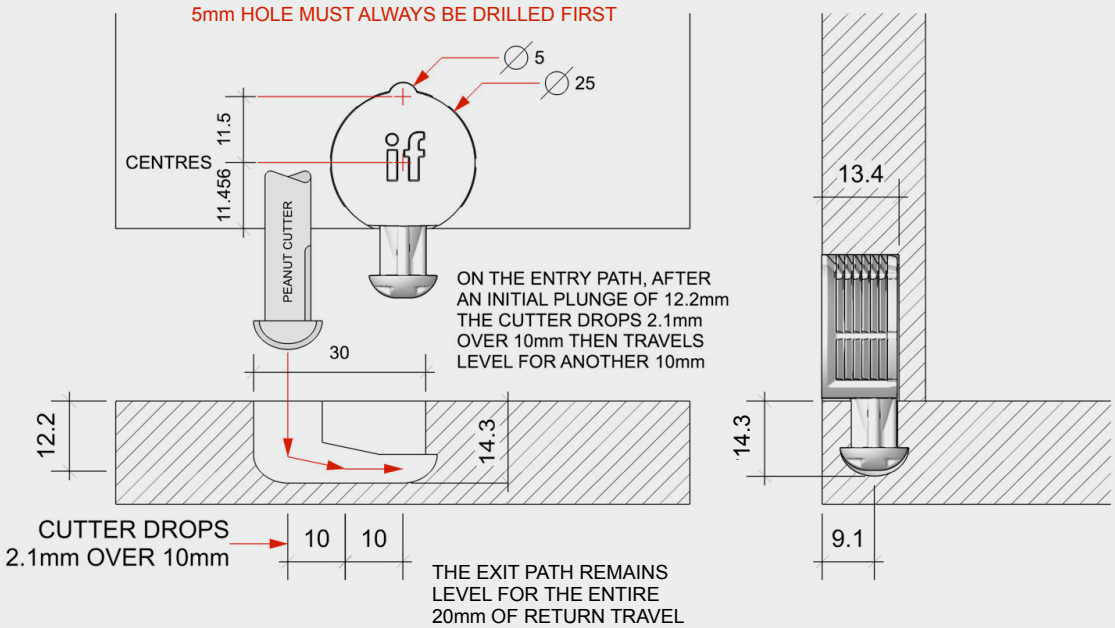

Assembly instructions

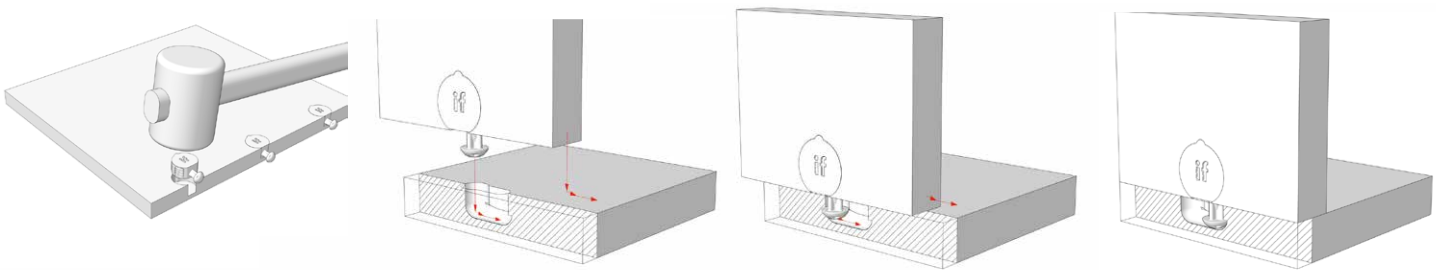

Product	Color	RAL Number	Pieces/Box	Order number	Pieces/Box	Order number
Peanut® 1	Jet Black	RAL 9005	200	2060009008111	1000	2060009008103
Peanut® 1	Fawn Brown	RAL 8007	200	2060009008113	1000	2060009008105
Peanut® 1	Brown Beige	RAL 1011	200	2060009008108	1000	2060009008116
Peanut® 1	Alabaster	RAL 1013	200	2060009008107	1000	2060009008115
Peanut® 1	Pearl Dark Grey	RAL 9023	200	2060009008101	1000	2060009008109
Peanut® 1	Telegrey	RAL 7047	200	2060009008106	1000	2060009008114
Peanut® 1	Signal White	RAL 9003	200	2060009008104	1000	2060009008112
Peanut® 1	Pue White	RAL 9010	200	2060009008102	1000	2060009008110

Strength data

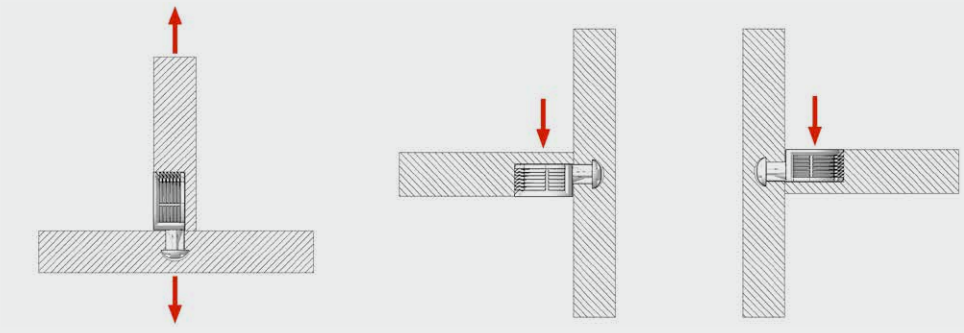

Material	Tensile strength 1 component (Figure A)	Shear strength 2 components (Figure B)	Shear strength 2 components (Figure C)
Particle board (18 mm MFC)	750 N / 75 KG	1200 N / 120 KG	650 N / 65 KG
MDF (18 mm)	950 N / 95 KG	1350 N / 135 KG	950 N / 95 KG
Tested by	CATAS Testing Certification Research	if make stronger connections	if make stronger connections

Please note that the strength may vary depending on the material and quality of the material used.

Connecting fittings
PEANUT® 2

Variants

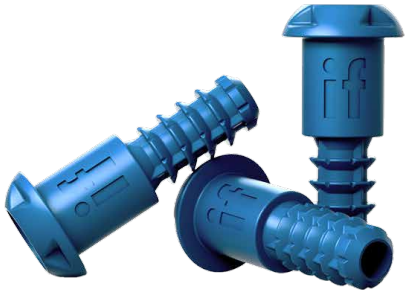

Applications

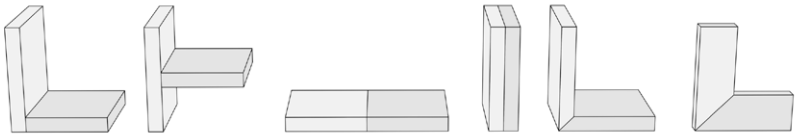

Features

- Self-clinching

  One-component connection
- Ideal for drilling and insertion machines
- PEANUT Jig and Mini Jig compatible
- Creates a strong connection
- Quick and easy assembly
- Can be installed several times

Technical specifications

Component composition

Glass-fiber reinforced plastic

Material thikness

90° connection: >15,3 mm

Tolerance (Peanut® milling)

+0,3 mm und -0,4 mm (depth)

Machining

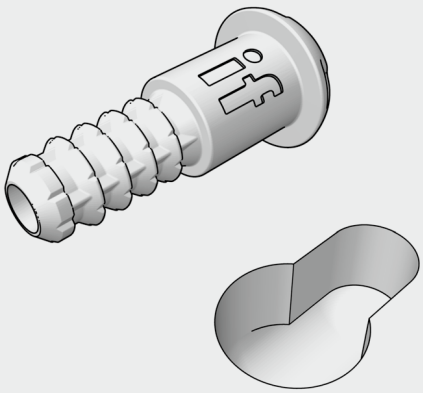

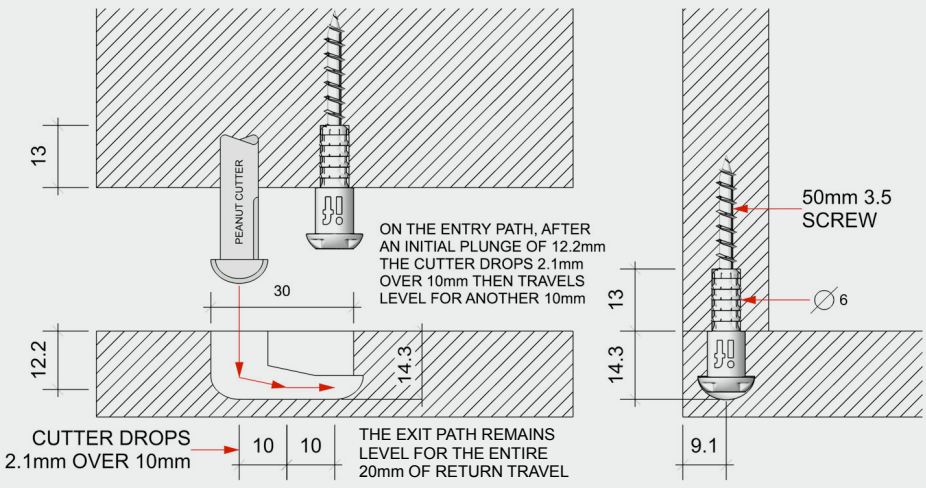

Assembly instructions

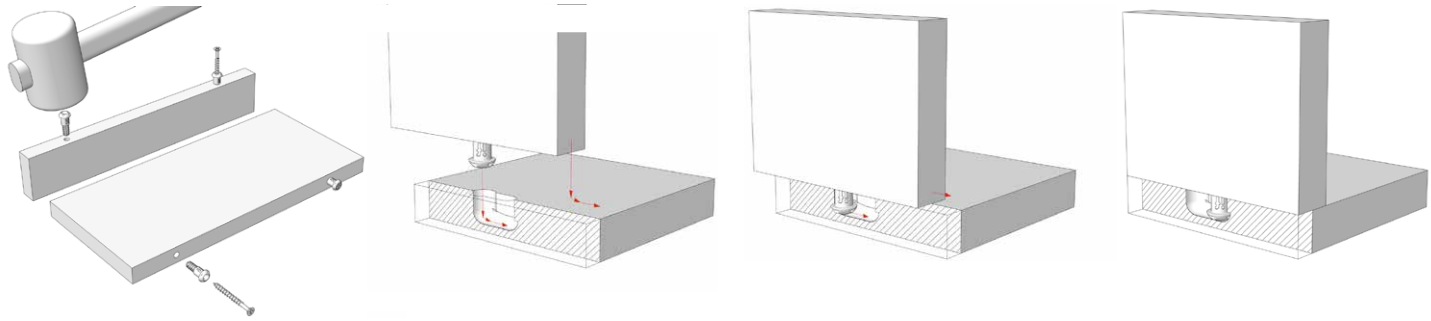

Product	Pieces/Box	Order number	Pieces/Box	Order number
Peanut® 2	200	2060009008201	1250	2060009008202

Strength data

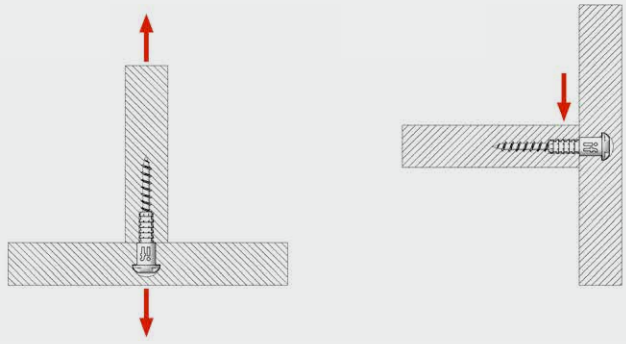

Material	Tensile strength 1 component (Figure A)	Shear strength 2 components (Figure B)
Particle board (18 mm MFC)	900 N / 90 KG	670 N / 67 KG
MDF (18 mm)	1000 N / 100 KG	930 N / 93 KG
Tested by	CATAS Testing Certification Research	if make stronger connections

Please note that the strength may vary depending on the material and quality of the material used.

Connecting fittings
PEANUT® 2 Short

Variants



Applications

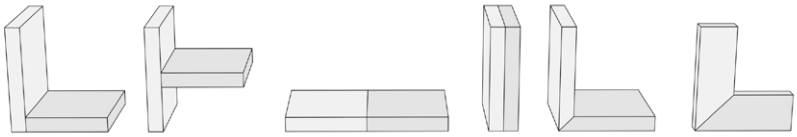

Features

- Self-clinching
  One-component connection
- Ideal for drilling and insertion machines
- PEANUT Jig and Mini Jig compatible
- Creates a strong connection
- Quick and easy assembly

Technical specifications

Component composition

Glass-fiber reinforced plastic

Material thikness

90° connection: >15,3 mm

45° connection: >18,0 mm

Tolerance (Peanut® milling)

+0,3 mm und -0,4 mm (depth)

Machining

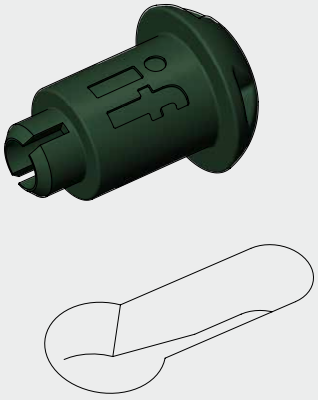

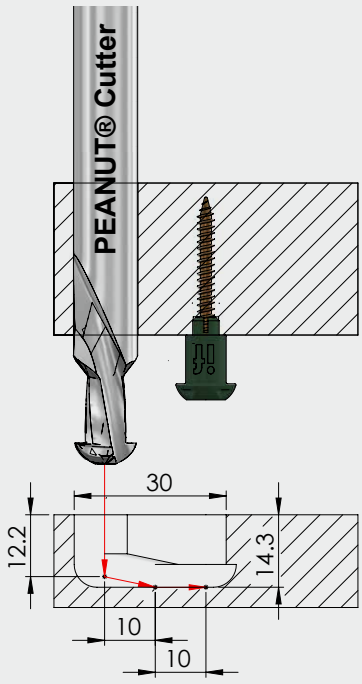

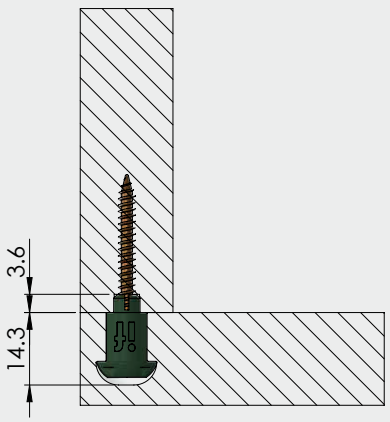

Assembly instructions

Example 1: 45° connection

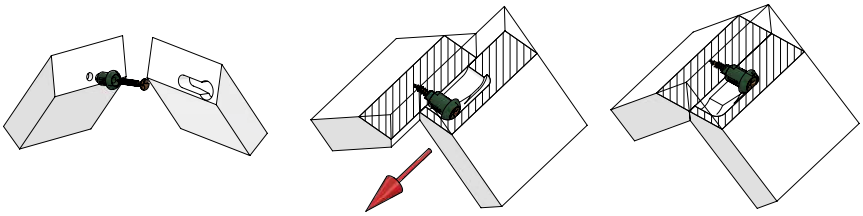

Example 2: Front on Front

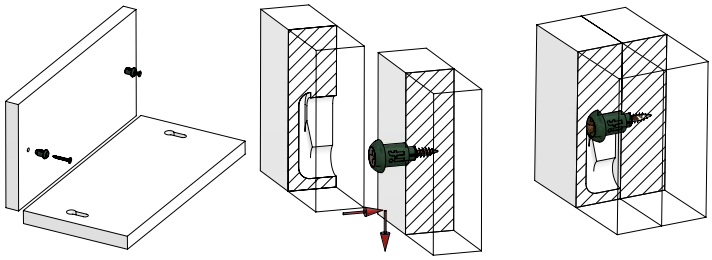

Product	Pieces/Box	Order number	Pieces/Box	Order number
Peanut® 2 Short	200	2060009008203	1250	2060009008204

Strength data

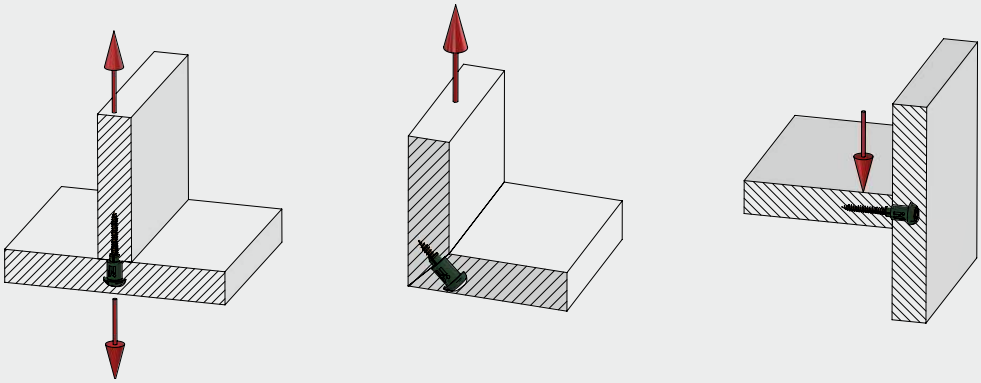

Material	Tensile strength 1 component (Figure A)	Shear strength 2 components (Figure B)	Shear strength 2 components (Figure C)
Particle board (18 mm MFC)	860 N / 86 KG	460 N / 46 KG	670 N / 67 KG
MDF (18 mm)	1010 N / 101 KG	650 N / 65 KG	930 N / 93 KG
Tested by	CATAS Testing Certification Research	CATAS Testing Certification Research	if make stronger connections

Please note that the strength may vary depending on the material and quality of the material used.

Connecting fittings
PEANUT® 3

Variants



Applications

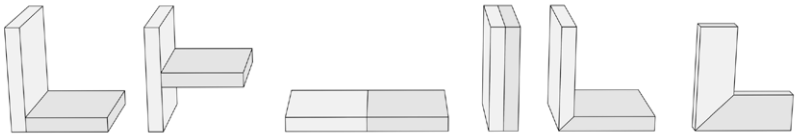

Features

- Self-clinching
  One-component connection
- Creates a strong connection
- Ideal for drilling and insertion machines
- Quick and easy assembly
- Can be installed several times

Technical specifications

Component composition

Glass-fiber reinforced plastic

Material thikness

90° connection: >15,3 mm

45° connection: >18,0 mm

Tolerance (Peanut® milling)

+0,3 mm und -0,4 mm (depth)

Machining

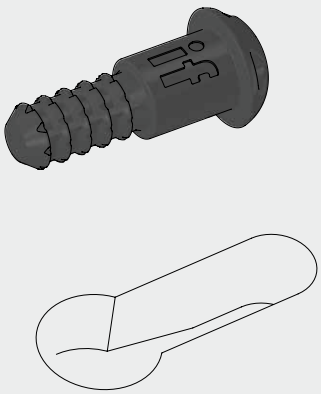

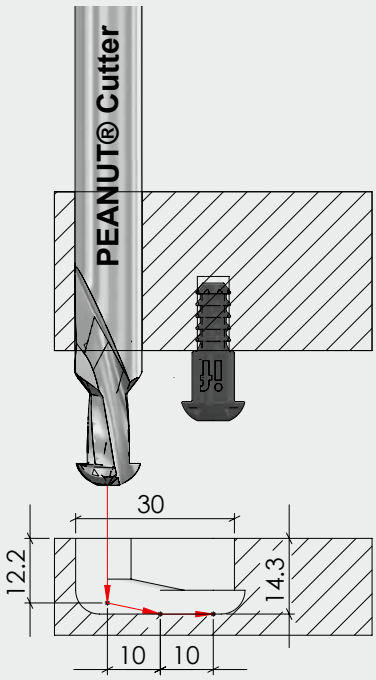

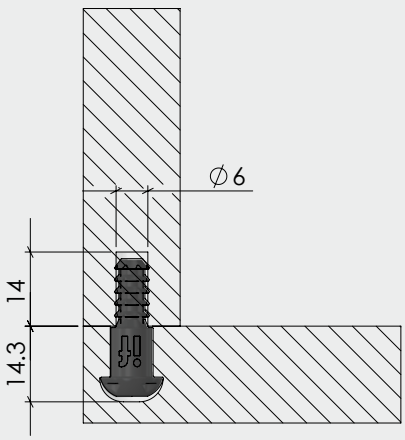

Assembly instructions

Example 1: 45° connection

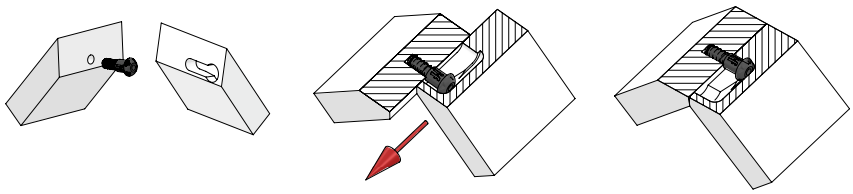

Example 2: Front on Front

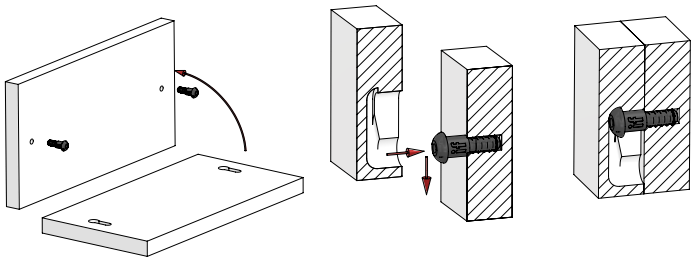

Product	Pieces/Box	Order number	Pieces/Box	Ordner number
Peanut® 3	200	2060009008301	1250	2060009008302

Strength data

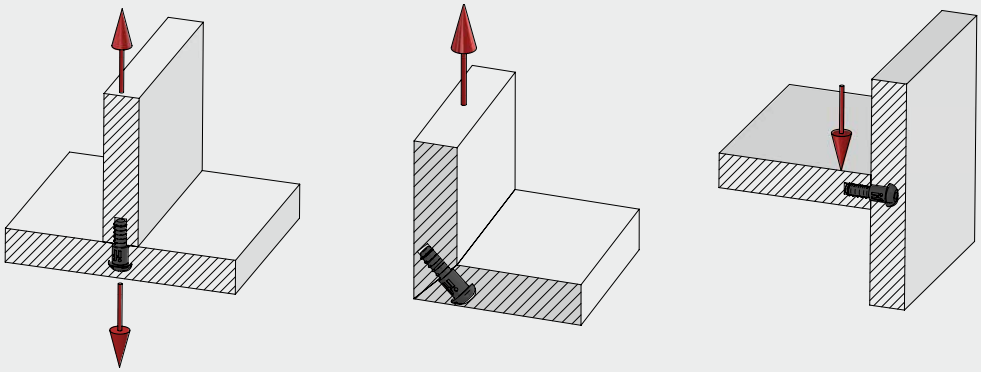

Material	Tensile strength 1 component (Figure A)	Shear strength 2 components (Figure B)	Shear strength 2 components (Figure C)
Particle board (18 mm MFC)	900 N / 90 KG	600 N / 60 KG	650 N / 65 KG
MDF (18 mm)	1050 N / 105 KG	670 N / 67 KG	920 N / 92 KG
Tested by	CATAS Testing Certification Research	CATAS Testing Certification Research	if make stronger connections

Please note that the strength may vary depending on the material and quality of the material used.

Connecting fittings
PEANUT® 3 Long

Variantes

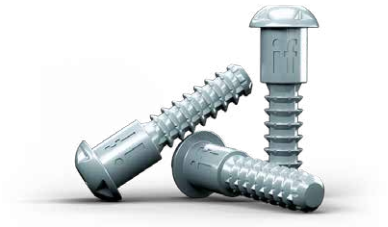

Applications

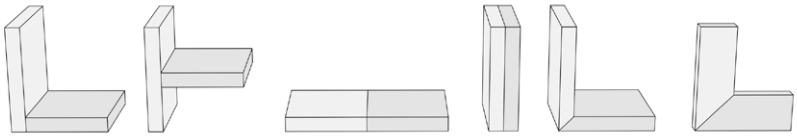

Features

- Self-clinching

  One-component connection
- Creates a strong connection
- Ideal for drilling and insertion machines
- Quick and easy assembly
- Can be installed several times

Technical specifications

Component composition

Glass-fiber reinforced plastic

Material thikness

90° connection: >15,3 mm

45° connection: >18,0 mm

Tolerance (Peanut® milling)

+0,3 mm und -0,4 mm (depth)

Machining

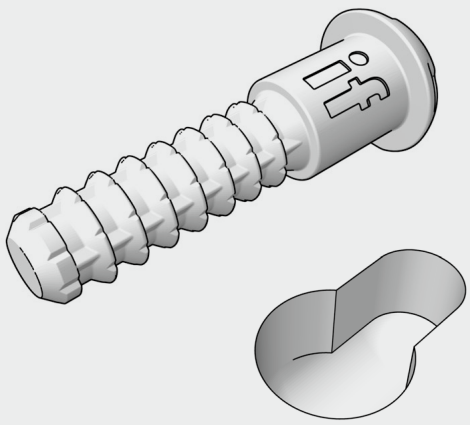

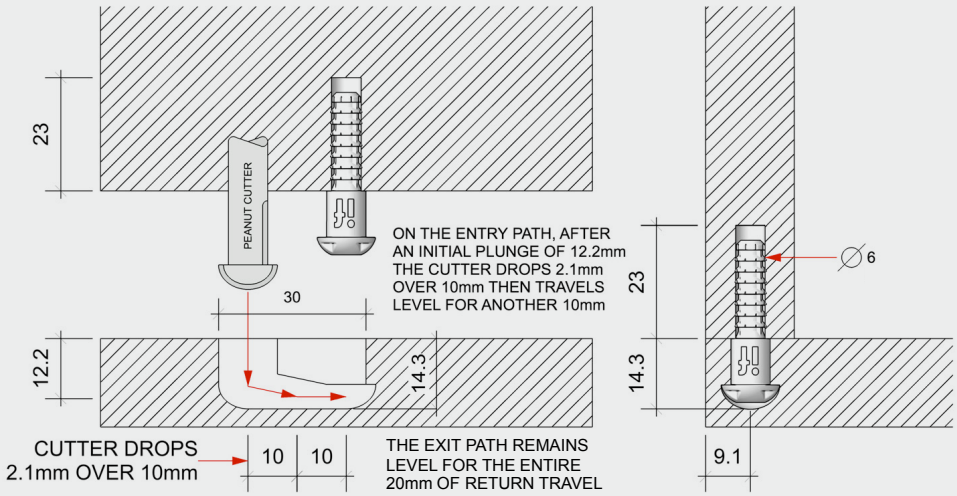

Assembly instructions

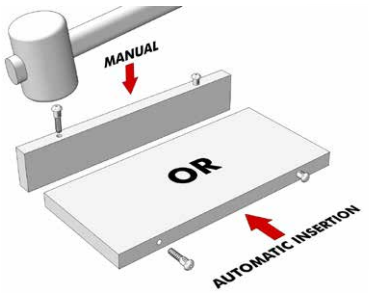

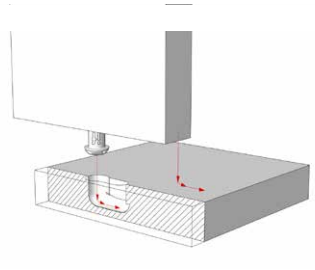
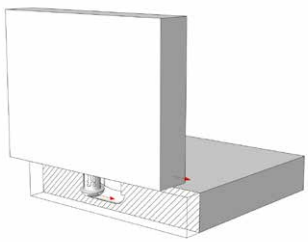
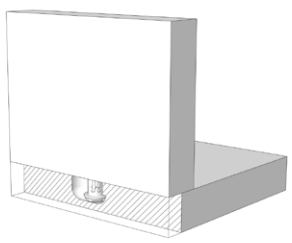

Product	Pieces/Box	Order number	Pieces/Box	Order number
Peanut® 3 Long	150	2060009008303	1000	2060009008304

Strength data

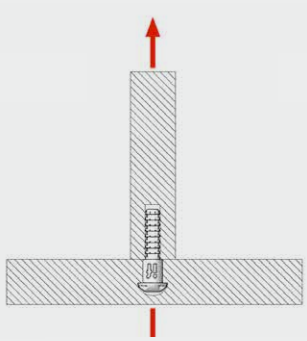
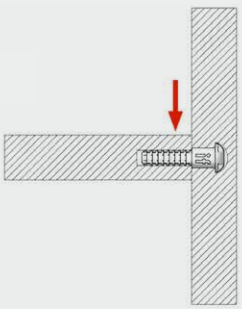

Material	Tensile strength 1 component (Figure A)	Shear strength 2 components (Figure B)
Particle board (18 mm MFC)	900 N / 90 KG	800 N / 80 KG
MDF (18 mm)	1050 N / 105 KG	1300 N / 130 KG
Tested by	CATAS Testing Certification Research	if make stronger connections

Please note that the strength may vary depending on the material and quality of the material used.

Connecting fittings
PEANUT® Cutter and Drill Pack

Cutter



Dimensions

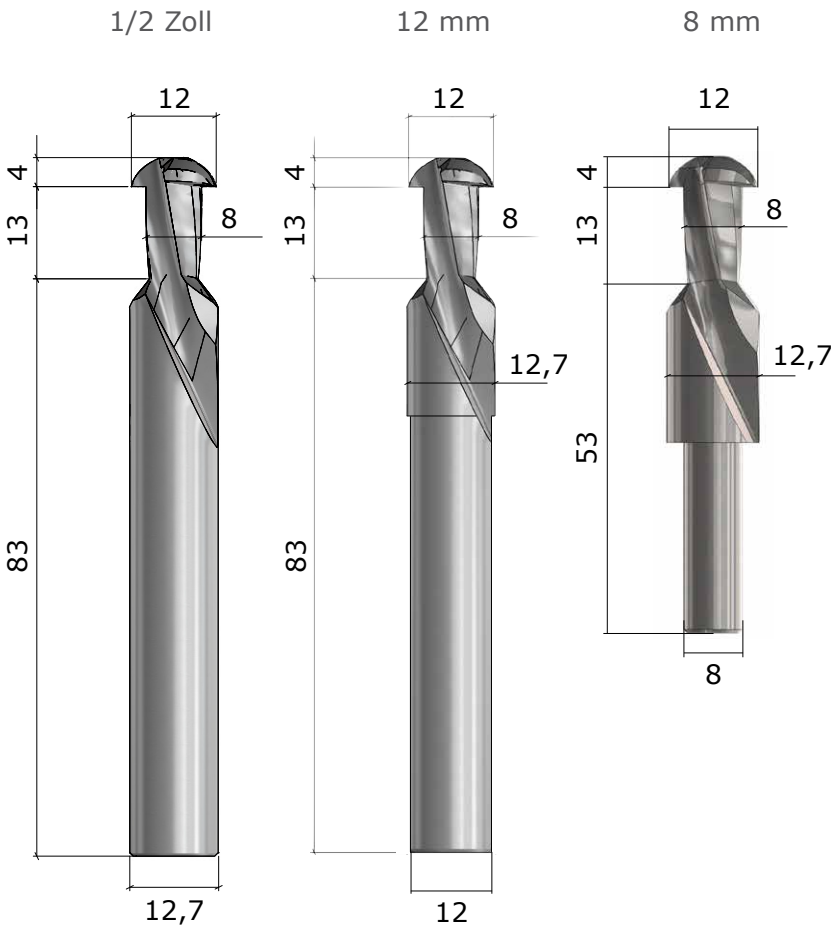

Features

- Required for all PEANUT® components
- Creates the PEANUT® slot
- 3 shank sizes (1/2 inch, 12 mm, 8 mm)
- Max. 14,000 rpm
- Cannot be resharpened

The PEANUT cutter is a T-shaped cutter with a curved head and produces the PEANUT slots. The PEANUT cutter creates a keyhole groove that has an undercut. The PEANUT component is inserted into the slot and slides along the undercut to join two panels together.

The PEANUT slot is required for all PEANUT connectors. The cutter is precision milled from 1/2” solid carbide rods and cannot be reground. To produce an 8 mm or 12 mm PEANUT cutter, the 1/2” PEANUT cutter is ground to the correct size in a second operation.

Product	Pieces/Box	Order number
PEANUT® Cutter 1/2" Shank	1	2060009008020
PEANUT® Cutter 8 mm Shank	1	2060009008002
PEANUT® Cutter 12 mm Shank	1	2060009008001

Drill pack



Dimensions



Features

- Required for the PEANUT® 1 system
- 24.9 mm drill bit and 5 mm drill bit
- Material: Solid carbide

The PEANUT 1 Drill Pack consists of a 24.9 mm and a 5 mm solid carbide CNC drill bit. The drill pack is used to make the holes for the PEANUT 1 connector. To make the PEANUT 1 holes, the 5 mm hole must be drilled before the 25 mm hole. This ensures a perfect recess for the PEANUT 1. The 24.9 mm CNC drill bit is designed to create a hole that fits the PEANUT 1 connector perfectly. A 25 mm CNC drill can still be used to achieve a near perfect fit.

Product	Pieces/Box	Order number
PEANUT® 1 Drill Pack	1	2060009008003

Frame runner system

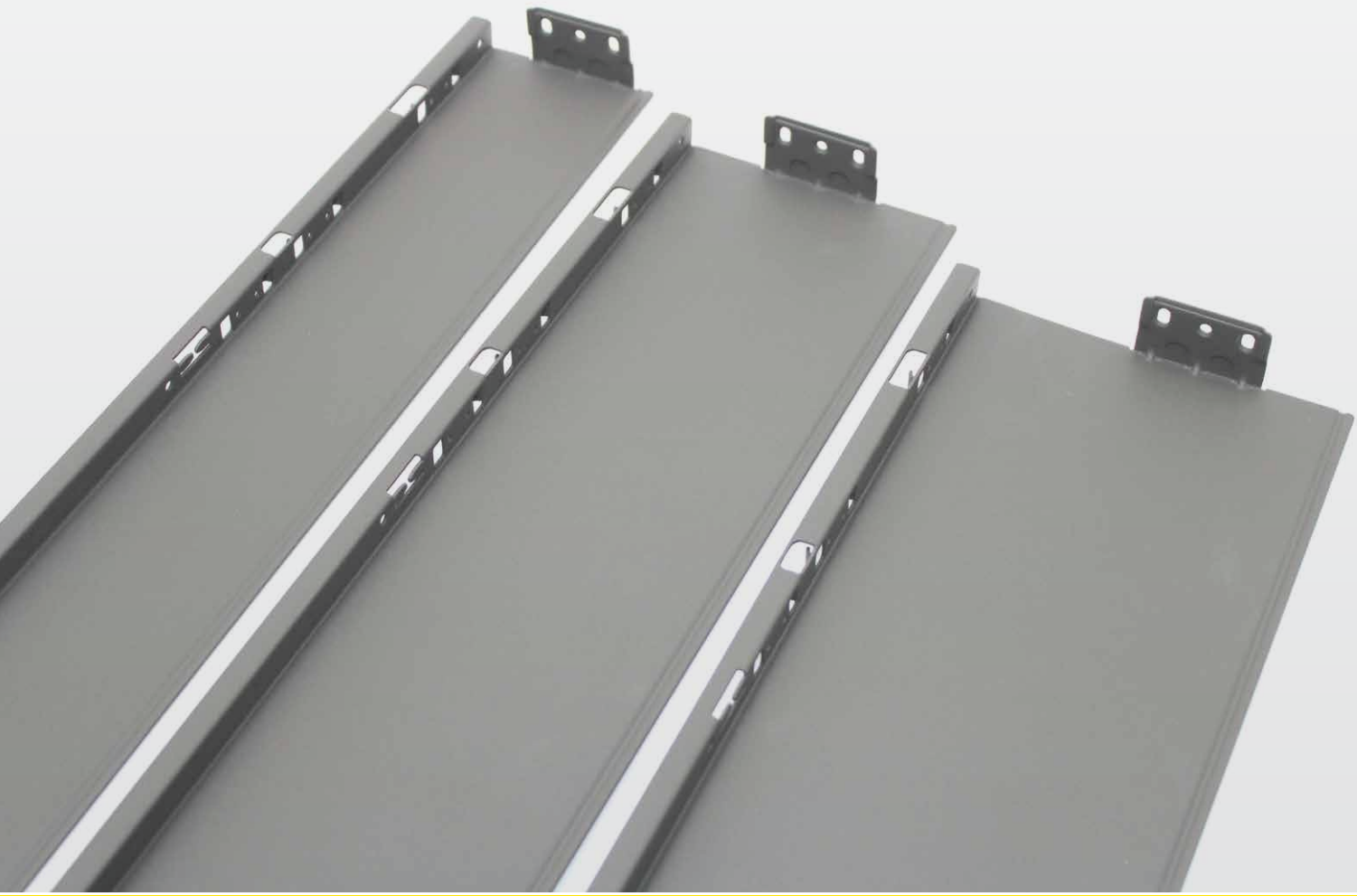

Frame runner system

Bottom thickness up to 14 mm, back panel continuous _____Page 134
Bottom thickness 14–18 mm, bottom continuous _____Page 140

Product

The drawer runner systems ensure precise guidance and high stability of drawers. These systems are not only functional and lightweight, but also make a significant contribution to the comfort and durability of furniture and constructions. The drawer system can be combined with the Perfect partial-extension runner and the Extreme full-extension runner.

The scope of delivery per set always includes one left and one right single-panel frame with back panel holder and front attachment as well as a pair of cover caps.

Ordering information

You can choose the drawer runner systems with the following runners

Single Extension Perfect

- Soft-Close and Plug-on assembly
- Stub, Soft-Close, Plug-on assembly and Lift Lock
- Offset hanging tab

Full Extension Extreme

- Soft-Close and Plug-on assembly

Frame runner system

Bottom thickness up to 14 mm, back panel continuous

3D view



Cutting dimensions

Front

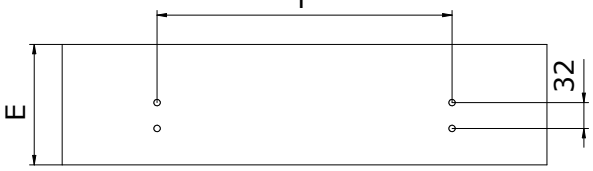

Back panel

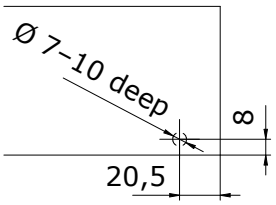

Back panel

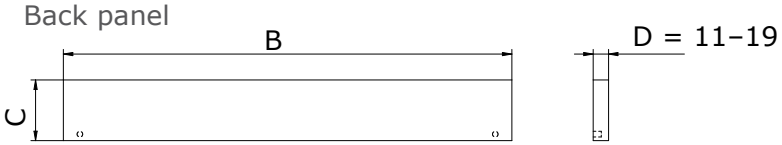

Drawer bottom

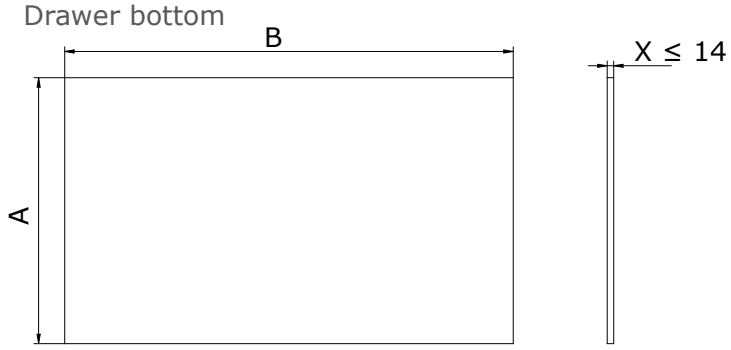

Calculations

A = Nominal length - Back panel width (D) - 2 mm

B = Inside cabinet width - 14 mm

C = Frame height - 5 mm

D = Back panel width = 11-19 mm

E = Front height

F = Inside cabinet width - 53 mm

Features

- Colors: grey and white
- Areas of application: Drawers and front pull-outs
- Material: steel
- Assembly: for screwing

Optional features

- Nominal length: 250 – 550 mm
- Frame height: 80 mm, 120 mm, 150 mm
- Inside cabinet width
- Single Extension Perfect (Load capacity 25 kg)
- Full Extension Extreme (Load capacity 30 kg)

Installation dimensions front with Perfect

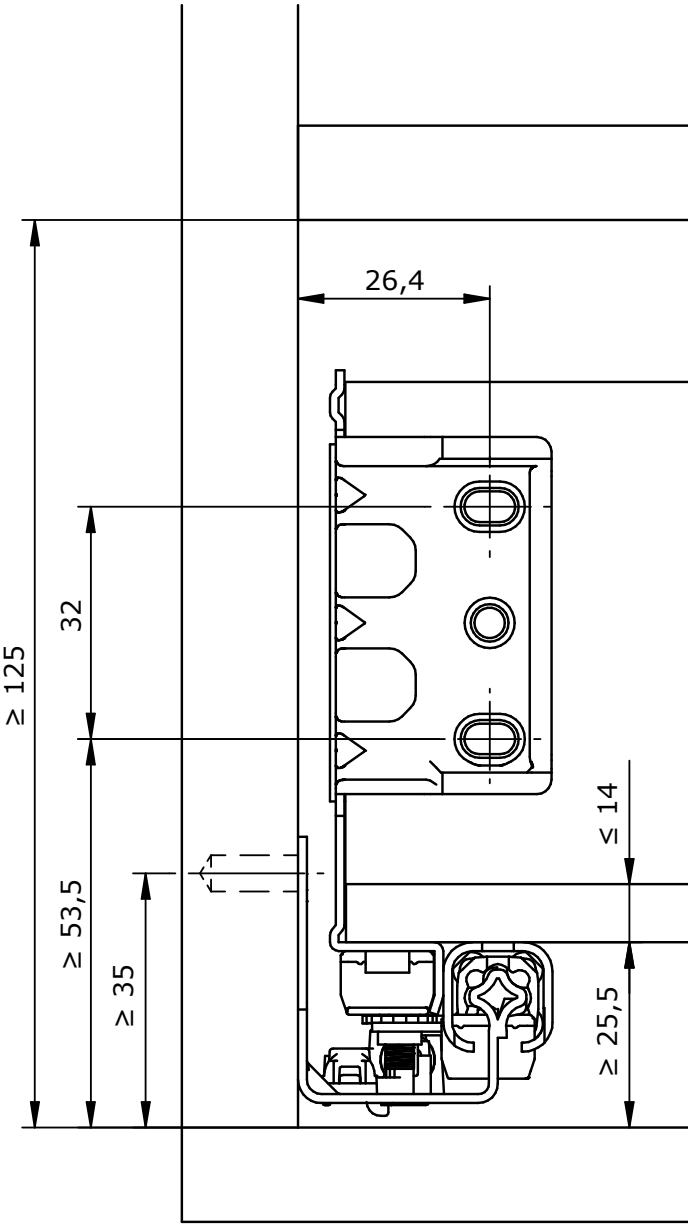

Installation dimensions back panel with Perfect

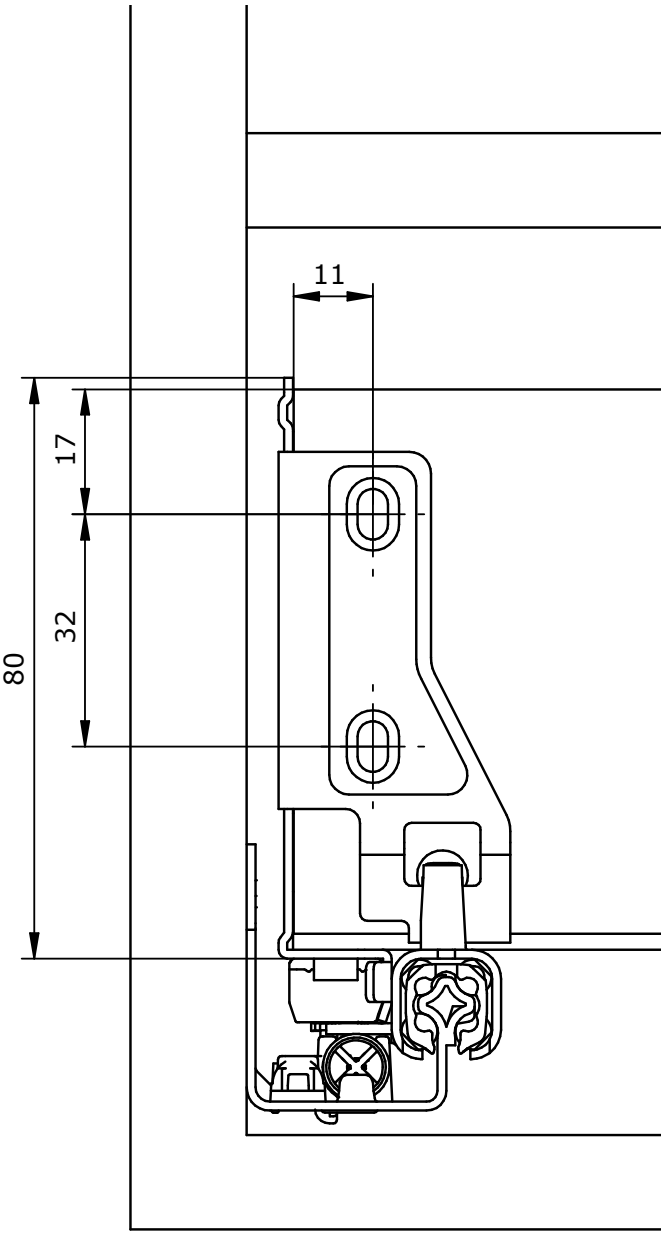

Frame height in mm	Nominal length in mm	Sets/Box	Order number Frames gray	Order number Frames white
80	250	1	2060009008348	2060009008349
80	300	1	2060009008354	2060009008355
80	350	1	2060009008360	2060009008361
80	400	1	2060009008366	2060009008367
80	450	1	2060009008372	2060009008373
80	500	1	2060009008378	2060009008379
80	550	1	2060009008384	2060009008385

Frame runner system

Bottom thickness up to 14 mm, back panel continuous

3D view



Cutting dimensions

Front

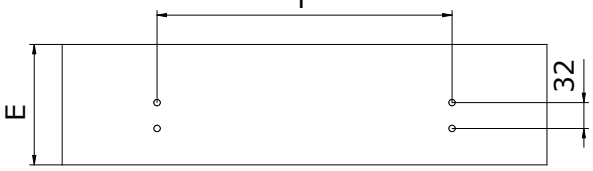

Back panel

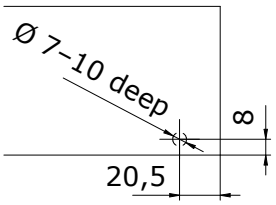

Back panel

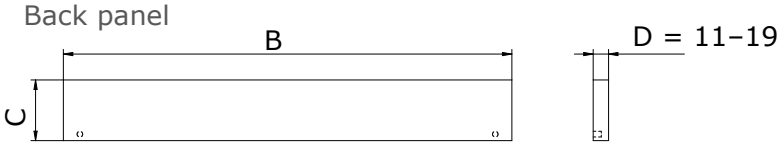

Drawer bottom

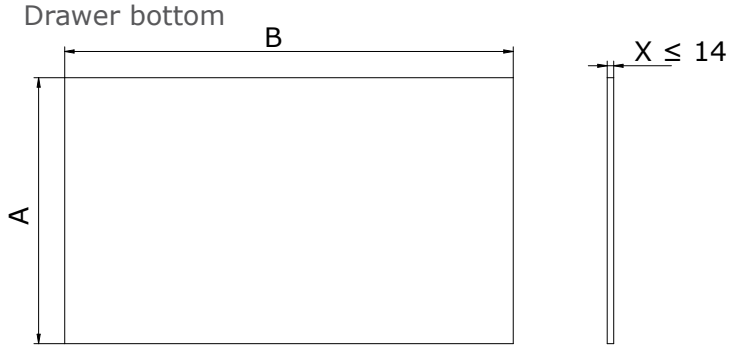

Calculations

A = Nominal length - Back panel width (D) - 2 mm

B = Inside cabinet width - 14 mm

C = Frame height - 5 mm

D = Back panel width = 11-19 mm

E = Front height

F = Inside cabinet width - 53 mm

Features

- Colors: grey and white
- Areas of application: Drawers and front pull-outs
- Material: steel
- Assembly: for screwing

Optional features

- Nominal length: 250 – 550 mm
- Frame height: 80 mm, 120 mm, 150 mm
- Inside cabinet width
- Single Extension Perfect (Load capacity 25 kg)
- Full Extension Extreme (Load capacity 30 kg)

Installation dimensions front with Perfect

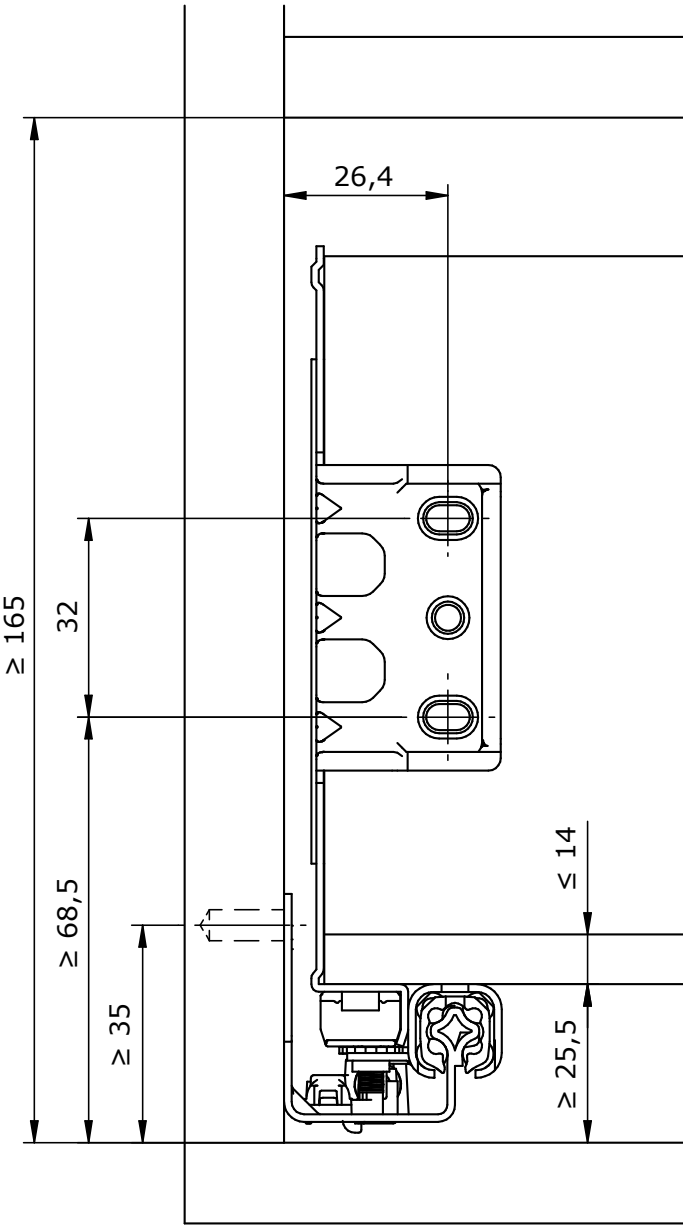

Installation dimensions back panel with Perfect

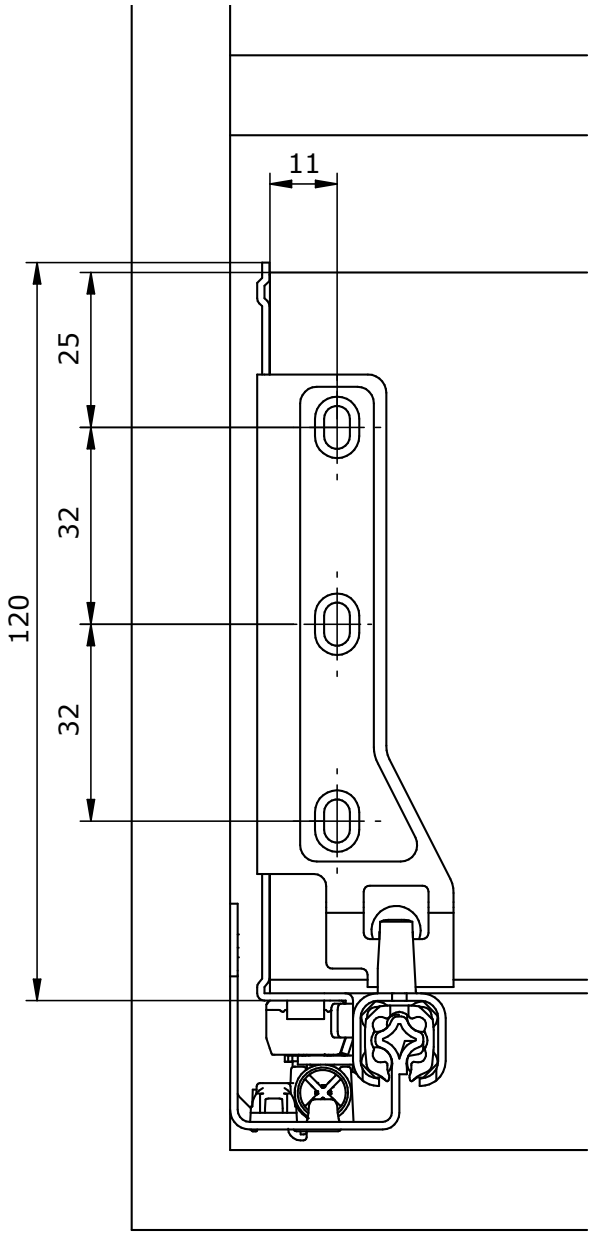

Frame height in mm	Nominal length in mm	Sets/Box	Order number Frames gray	Order number Frames white
120	250	1	2060009008350	2060009008351
120	300	1	2060009008356	2060009008357
120	350	1	2060009008362	2060009008363
120	400	1	2060009008368	2060009008369
120	450	1	2060009008374	2060009008375
120	500	1	2060009008380	2060009008381
120	550	1	2060009008386	2060009008387

Frame runner system

Bottom thickness up to 14 mm, back panel continuous

3D view



Cutting dimensions

Front

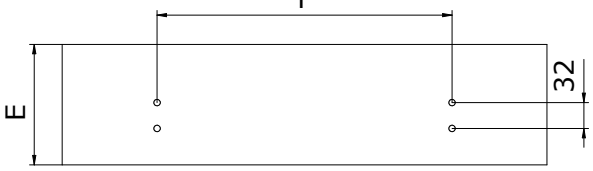

Back panel

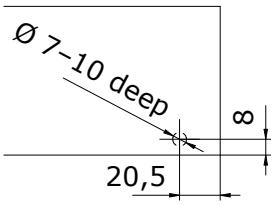

Back panel

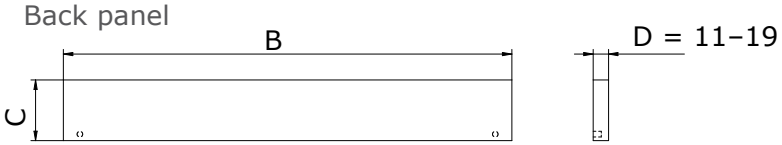

Drawer bottom

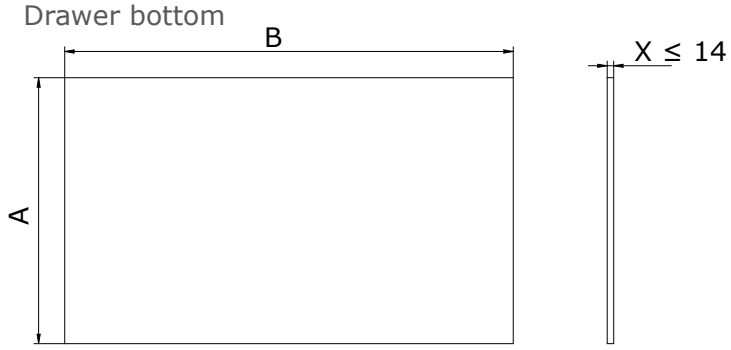

Calculations

A = Nominal length - Back panel width (D) - 2 mm

B = Inside cabinet width - 14 mm

C = Frame height - 5 mm

D = Back panel width = 11-19 mm

E = Front height

F = Inside cabinet width - 53 mm

Features

- Colors: grey and white
- Areas of application: Drawers and front pull-outs
- Material: steel
- Assembly: for screwing

Optional features

- Nominal length: 250 – 550 mm
- Frame height: 80 mm, 120 mm, 150 mm
- Inside cabinet width
- Single Extension Perfect (Load capacity 25 kg)
- Full Extension Extreme (Load capacity 30 kg)

Installation dimensions front with Perfect

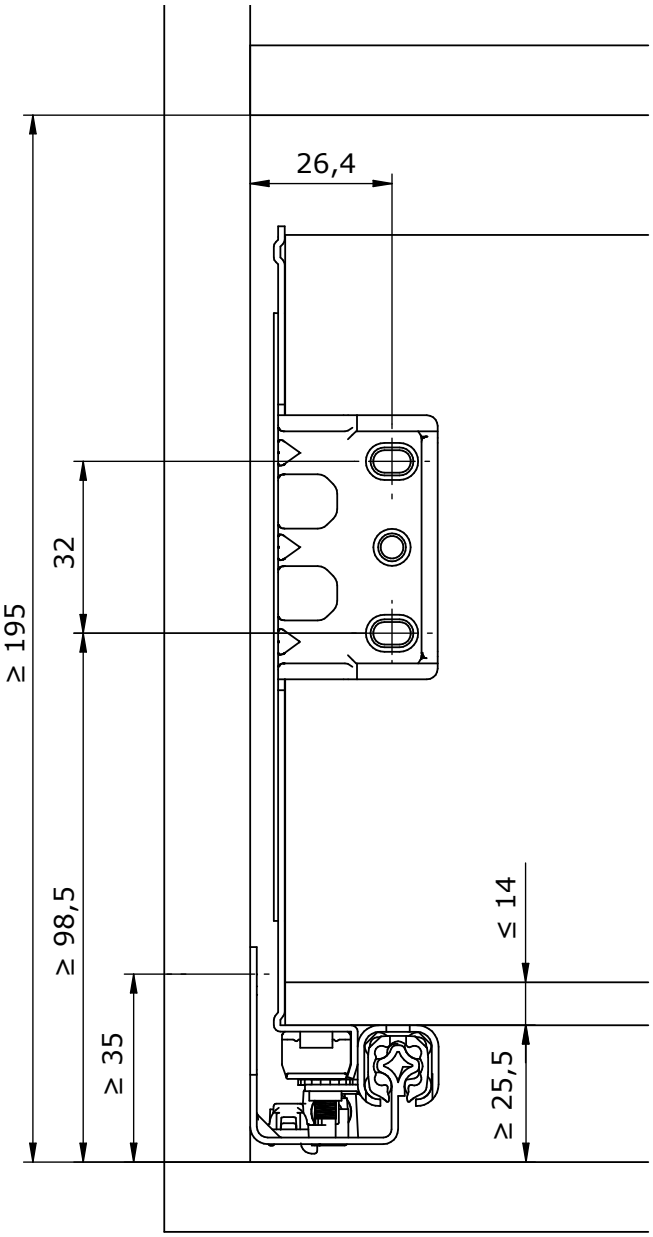

Installation dimensions back panel with Perfect

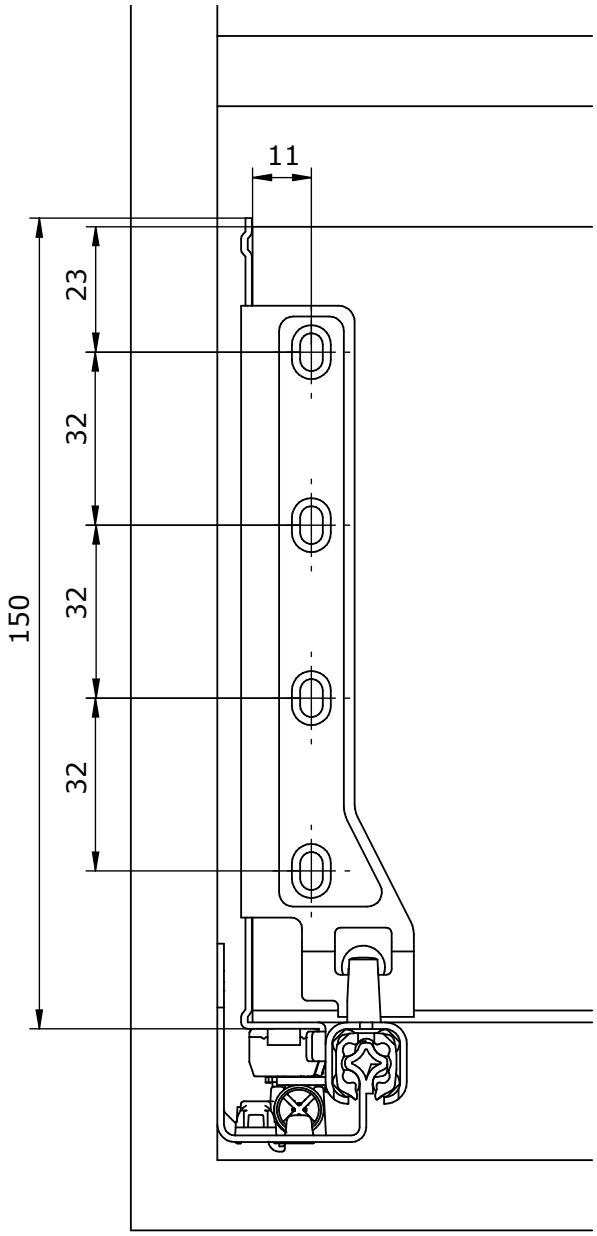

Frame height in mm	Nominal length in mm	Sets/Box	Order number Frames gray	Order number Frames white
150	250	1	2060009008352	2060009008353
150	300	1	2060009008358	2060009008359
150	350	1	2060009008364	2060009008365
150	400	1	2060009008370	2060009008371
150	450	1	2060009008376	2060009008377
150	500	1	2060009008382	2060009008383
150	550	1	2060009008388	2060009008389

Frame runner system
Bottom thickness 14–18 mm, bottom continuous

3D view



Cutting dimensions

Front

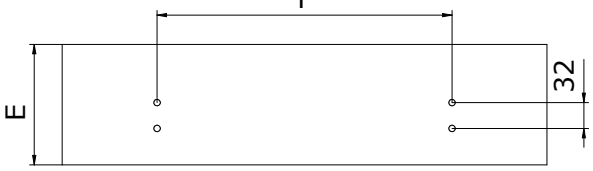

Back panel

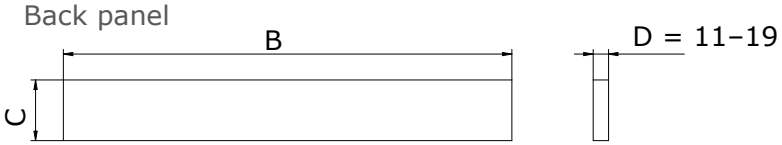

Drawer bottom

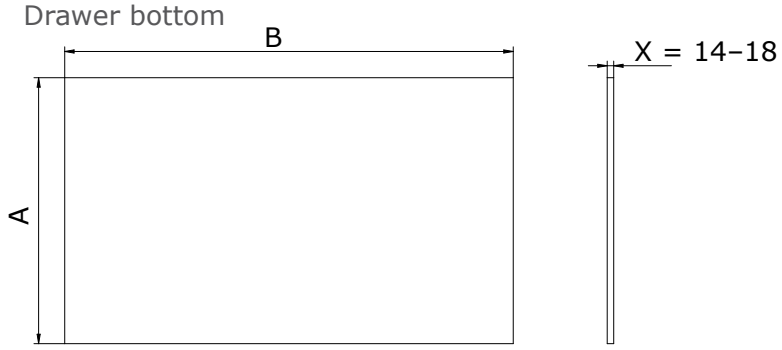

Calculations

A = Nominal length - 10 mm

B = Inside cabinet width - 14 mm

C = Frame height - Bottom thickness (X) - 3 mm

D = Back panel width = 11–19 mm

E = Front height

F = Inside cabinet width - 53 mm

Features

- Colors: grey and white
- Areas of application: Drawers and front pull-outs
- Material: steel
- Assembly: for screwing

Optional features

- Nominal length: 250 – 550 mm
- Frame height: 80 mm, 120 mm, 150 mm
- Inside cabinet width
- Single Extension Perfect (Load capacity 25 kg)
- Full Extension Extreme (Load capacity 30 kg)

Installation dimensions front with Perfect

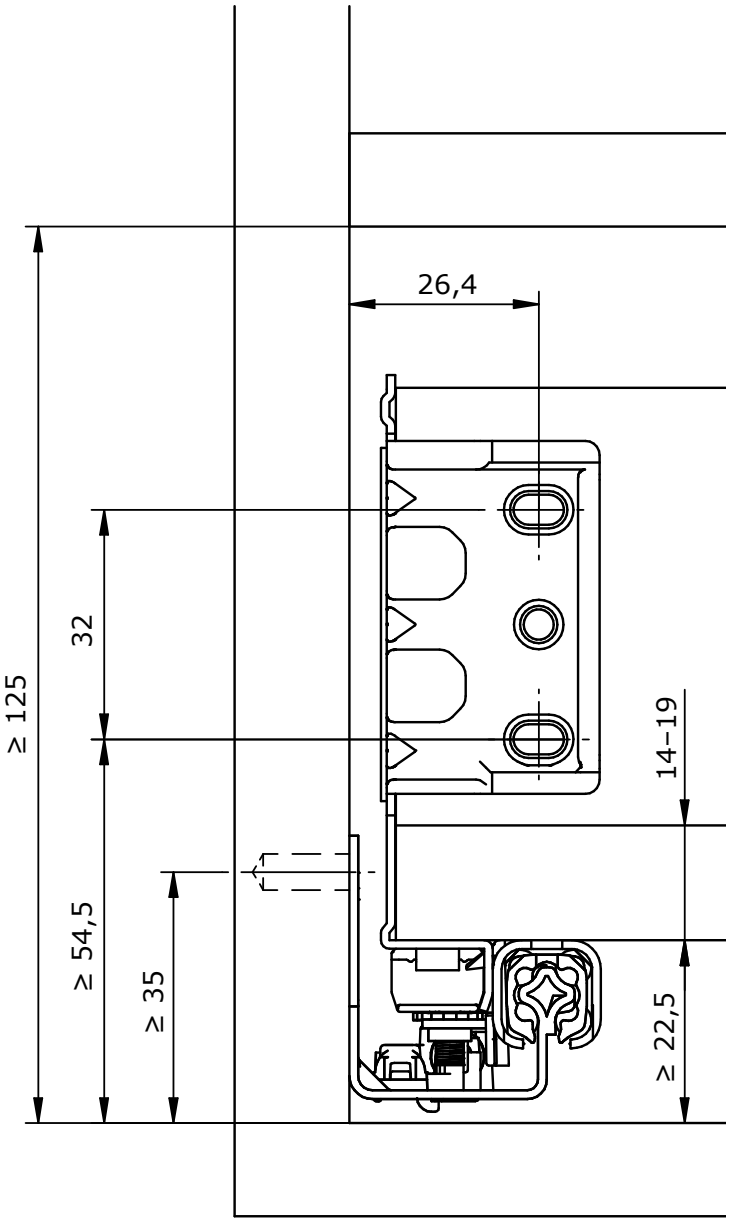

Installation dimensions back panel with Perfect

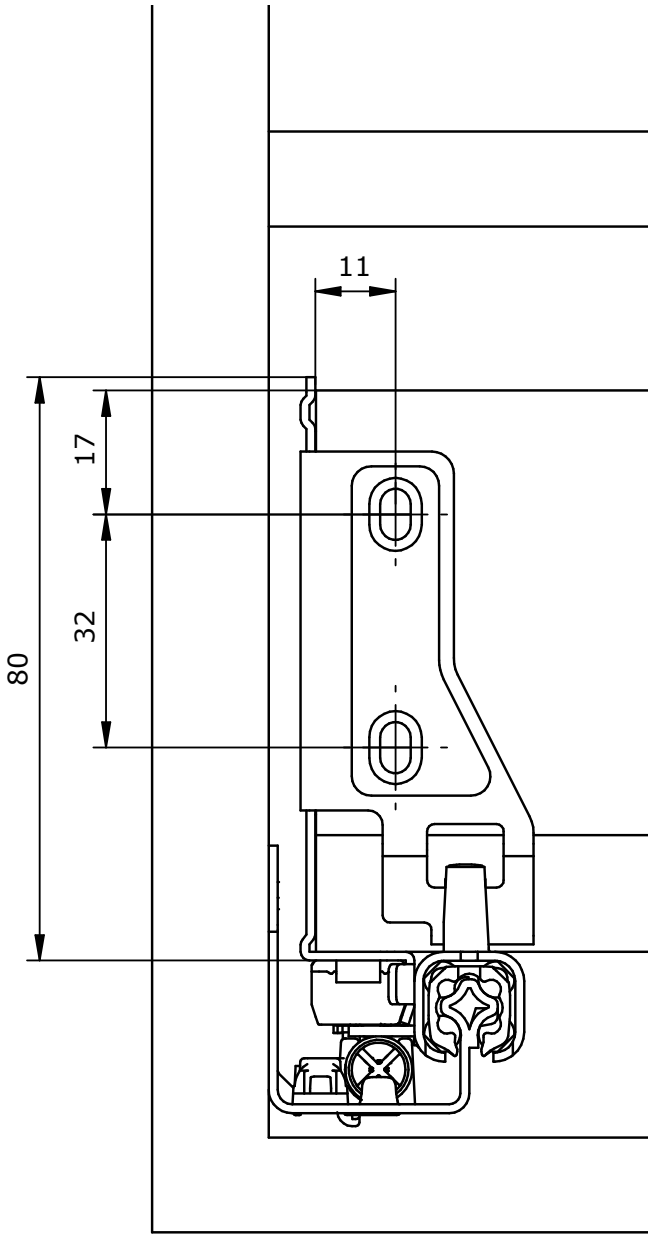

Frame height in mm	Nominal length in mm	Sets/Box	Order number Frames gray	Order number Frames white
80	250	1	2060009008348	2060009008349
80	300	1	2060009008354	2060009008355
80	350	1	2060009008360	2060009008361
80	400	1	2060009008366	2060009008367
80	450	1	2060009008372	2060009008373
80	500	1	2060009008378	2060009008379
80	550	1	2060009008384	2060009008385

Frame runner system
Bottom thickness 14–18 mm, bottom continuous

3D view



Cutting dimensions

Front

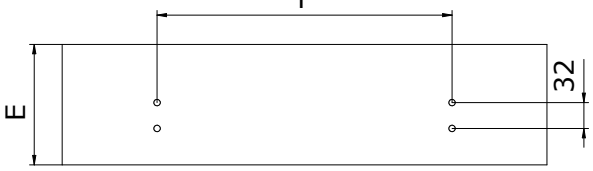

Back panel

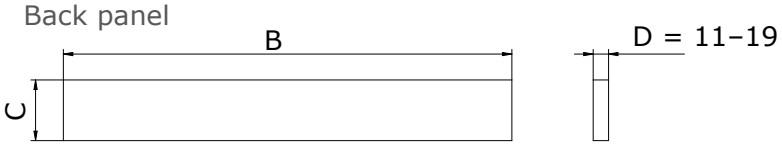

Drawer bottom

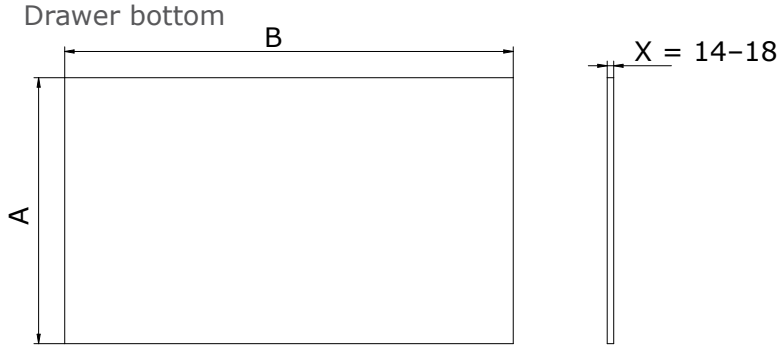

Calculations

A = Nominal length - 10 mm

B = Inside cabinet width - 14 mm

C = Frame height - Bottom thickness (X) - 3 mm

D = Back panel width = 11–19 mm

E = Front height

F = Inside cabinet width - 53 mm

Features

- Colors: grey and white
- Areas of application: Drawers and front pull-outs
- Material: steel
- Assembly: for screwing

Optional features

- Nominal length: 250 – 550 mm
- Frame height: 80 mm, 120 mm, 150 mm
- Inside cabinet width
- Single Extension Perfect (Load capacity 25 kg)
- Full Extension Extreme (Load capacity 30 kg)

Installation dimensions front with Perfect

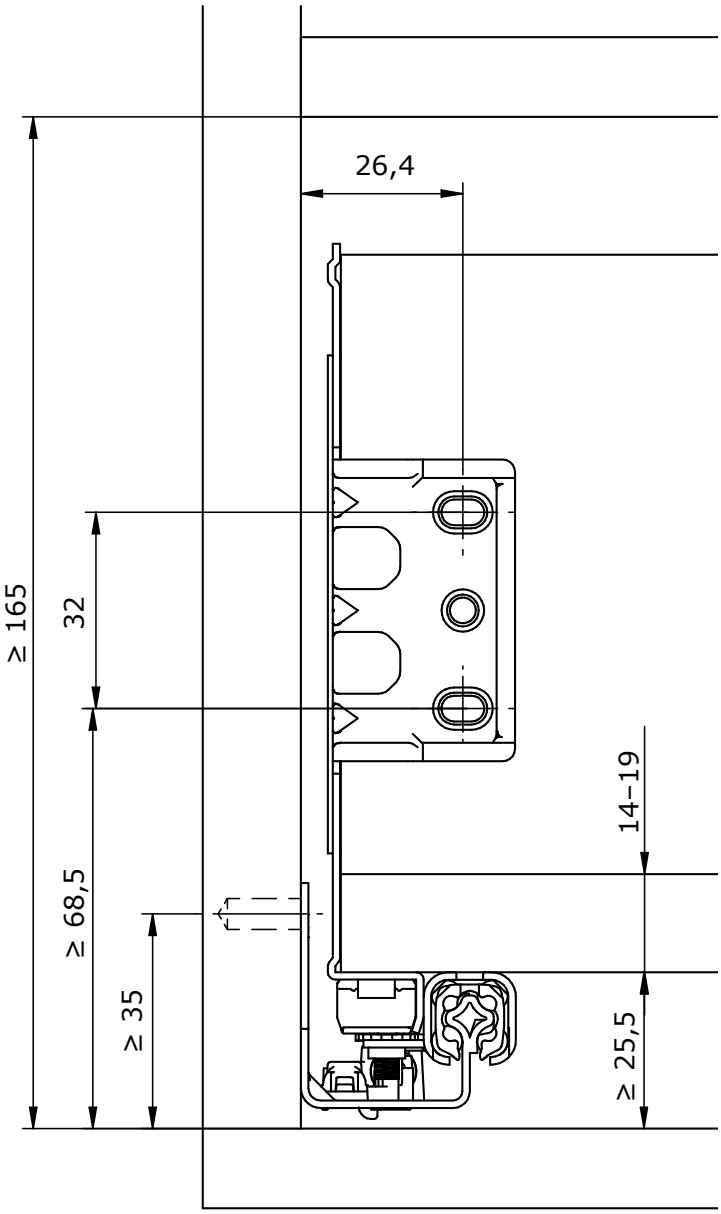

Installation dimensions back panel with Perfect

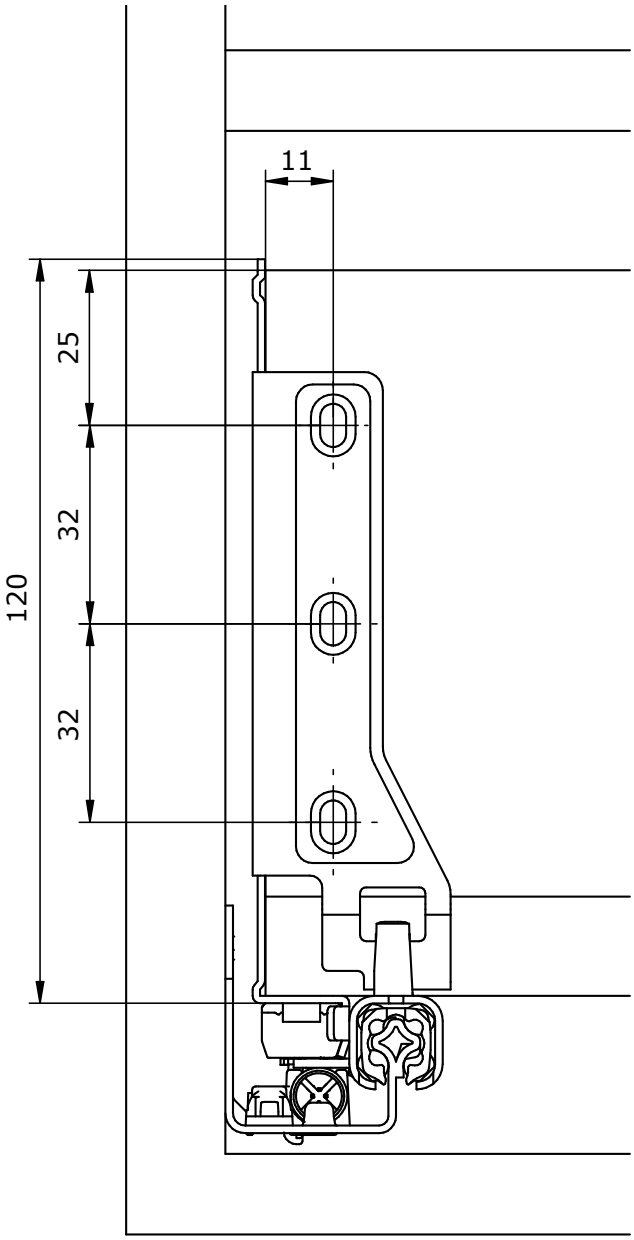

Frame height in mm	Nominal length in mm	Sets/Box	Order number Frames gray	Order number Frames white
120	250	1	2060009008350	2060009008351
120	300	1	2060009008356	2060009008357
120	350	1	2060009008362	2060009008363
120	400	1	2060009008368	2060009008369
120	450	1	2060009008374	2060009008375
120	500	1	2060009008380	2060009008381
120	550	1	2060009008386	2060009008387

Frame runner system
Bottom thickness 14–18 mm, bottom continuous

3D view



Cutting dimensions

Front

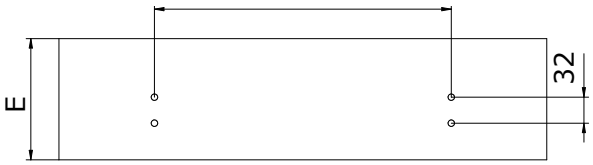

Back panel

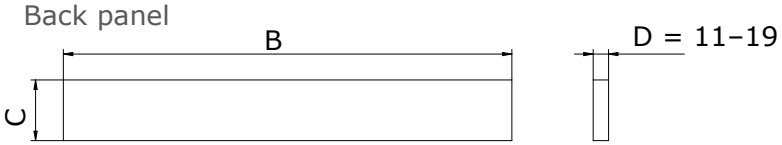

Drawer bottom

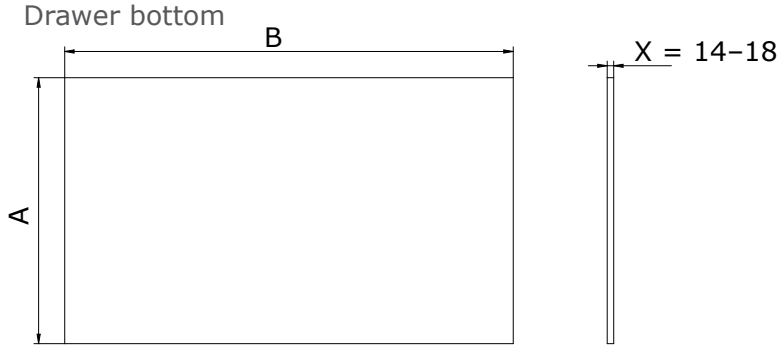

Calculations

A = Nominal length - 10 mm

B = Inside cabinet width - 14 mm

C = Frame height - Bottom thickness (X) - 3 mm

D = Back panel width = 11–19 mm

E = Front height

F = Inside cabinet width - 53 mm

Features

- Colors: grey and white
- Areas of application: Drawers and front pull-outs
- Material: steel
- Assembly: for screwing

Optional features

- Nominal length: 250 – 550 mm
- Frame height: 80 mm, 120 mm, 150 mm
- Inside cabinet width
- Single Extension Perfect (Load capacity 25 kg)
- Full Extension Extreme (Load capacity 30 kg)

Installation dimensions front with Perfect

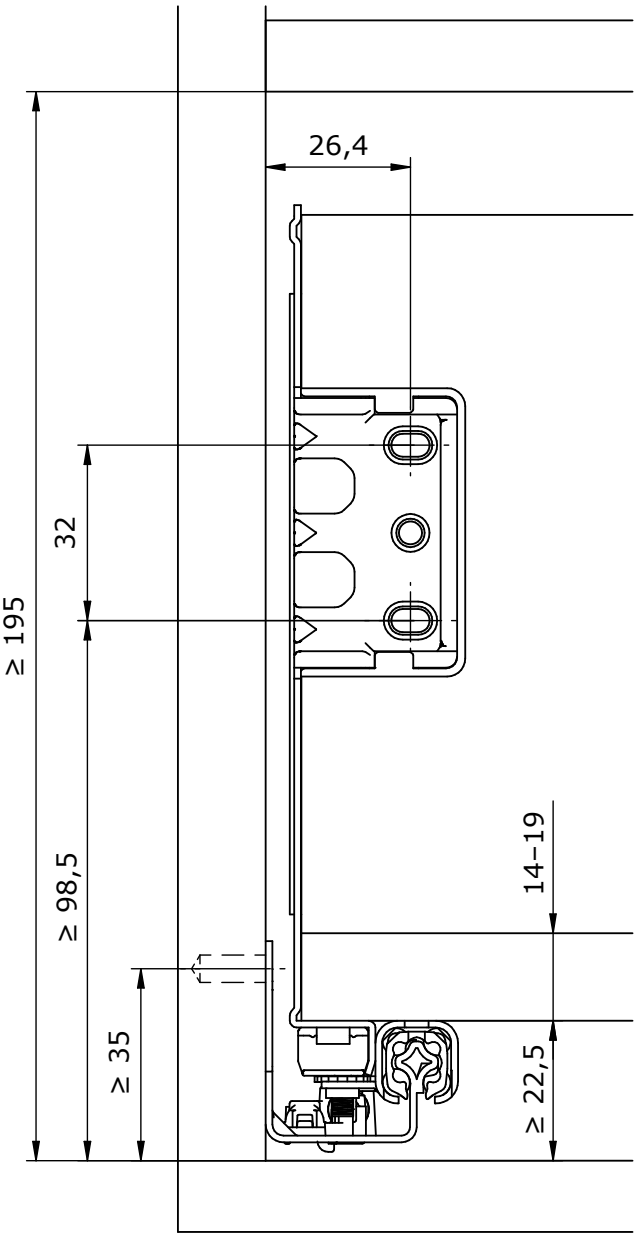

Installation dimensions back panel with Perfect

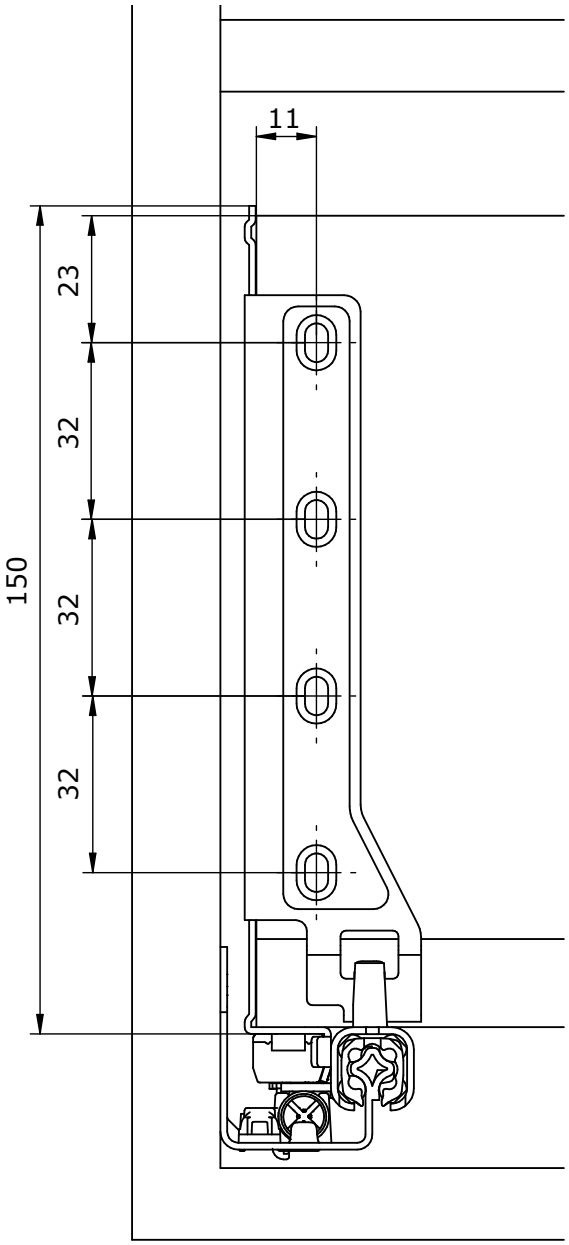

Frame height in mm	Nominal length in mm	Sets/Box	Order number Frames gray	Order number Frames white
150	250	1	2060009008352	2060009008353
150	300	1	2060009008358	2060009008359
150	350	1	2060009008364	2060009008365
150	400	1	2060009008370	2060009008371
150	450	1	2060009008376	2060009008377
150	500	1	2060009008382	2060009008383
150	550	1	2060009008388	2060009008389

Hinge cup

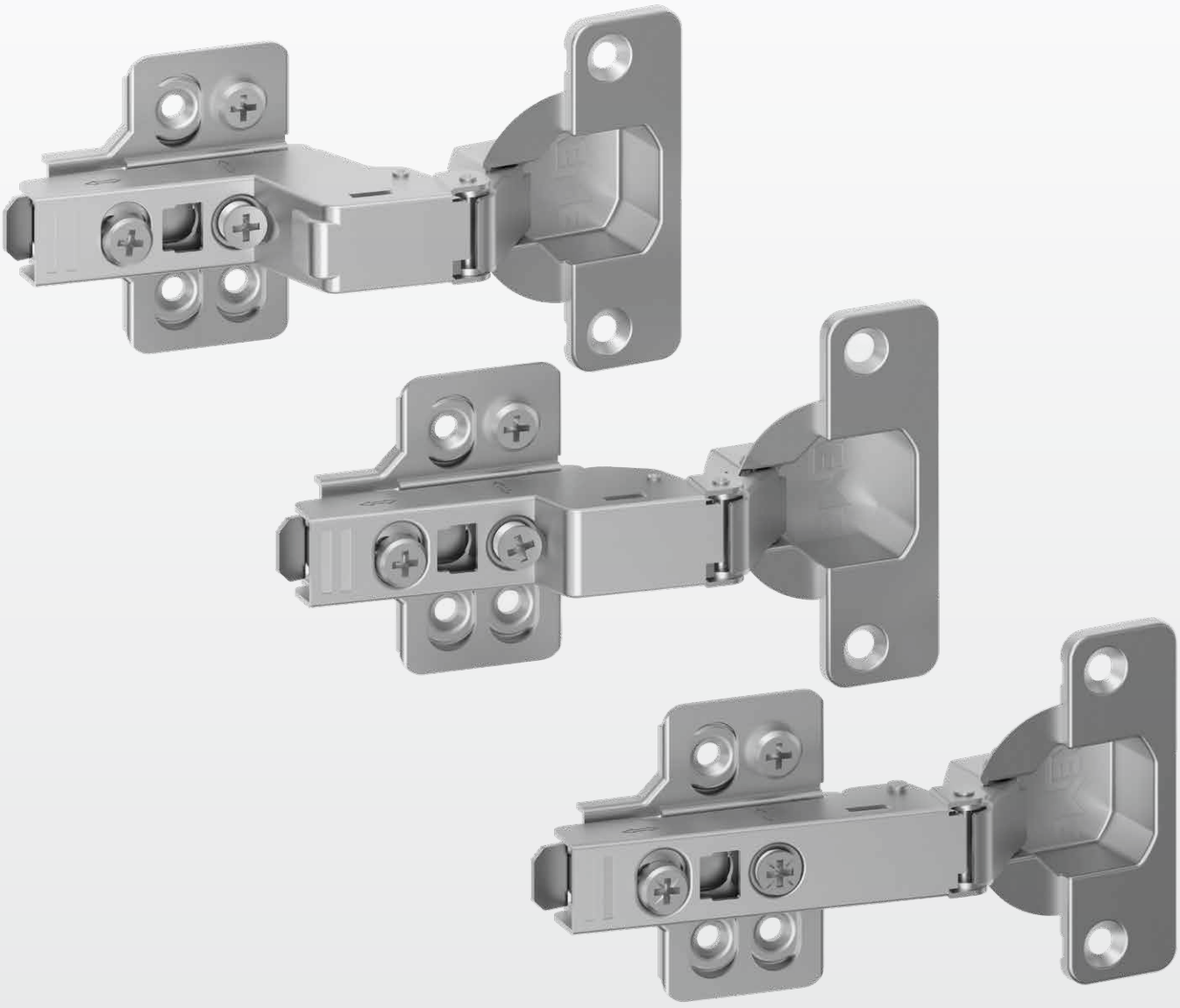

Hinge cup

Hinge cup 35mm with 3D adjustment _____ Page 148

Product

Reliable technology for precise furniture construction: Our 35 mm concealed hinge features 3D adjustment for accurate door alignment and smooth, comfortable operation in everyday use. Various overlay options as well as versions with soft-close or self-closing function, provide the right solution for a wide range of installation requirements.

Request and order

Do you have any questions about our products or would like to have an non-binding offer? Then simply contact us now.
We'll be glad to help you!

Contact form

Hinge cup 35mm with 3D adjustment
with mounting plate



Features

- Opening angle 110°
- Hinge cup diameter 35mm
- Drilling depth 12mm
- Mounting type: Hinge Cup for screwing
- Adjustment in three dimensions
- Available overlay types
  - Full overlay
  - Half overlay
  - Inset
- Range for door thickness 15-22mm
- With Soft close or Self close

Overlay type	Mounting plate	Soft close	Self close	Hinges/Box
Full overlay	H0		X	200
Half overlay	H0		X	200
Inset	H0		X	200
Full overlay	H2		X	200
Half overlay	H2		X	200
Inset	H2		X	200

Overlay type	Mounting plate	Soft close	Self close	Hinges/Box
Full overlay	H0	X		200
Half overlay	H0	X		200
Inset	H0	X		200
Full overlay	H2	X		200
Half overlay	H2	X		200
Inset	H2	X		200

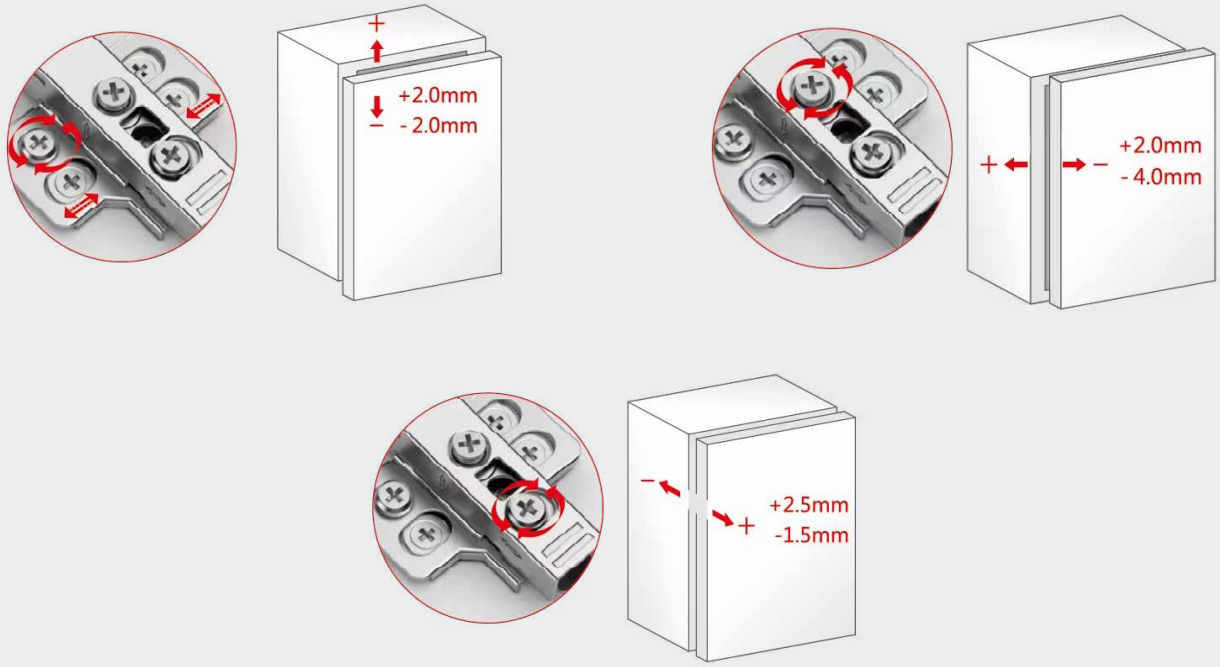

Boxes/Pallet maximum	Pieces/Pallet maximum	Weight/Pallet maximum	Order number
24	4800	445	2060009008403
24	4800	484	2060009008404
24	4800	449	2060009008405
24	4800	445	2060009008406
24	4800	484	2060009008407
24	4800	449	2060009008408

Boxes/Pallet maximum	Pieces/Pallet maximum	Weight/Pallet maximum	Order number
24	4800	454	2060009008397
24	4800	484	2060009008398
24	4800	458	2060009008399
24	4800	454	2060009008400
24	4800	484	2060009008401
24	4800	458	2060009008402

Hinge cup 35mm with 3D adjustment
with mounting plate

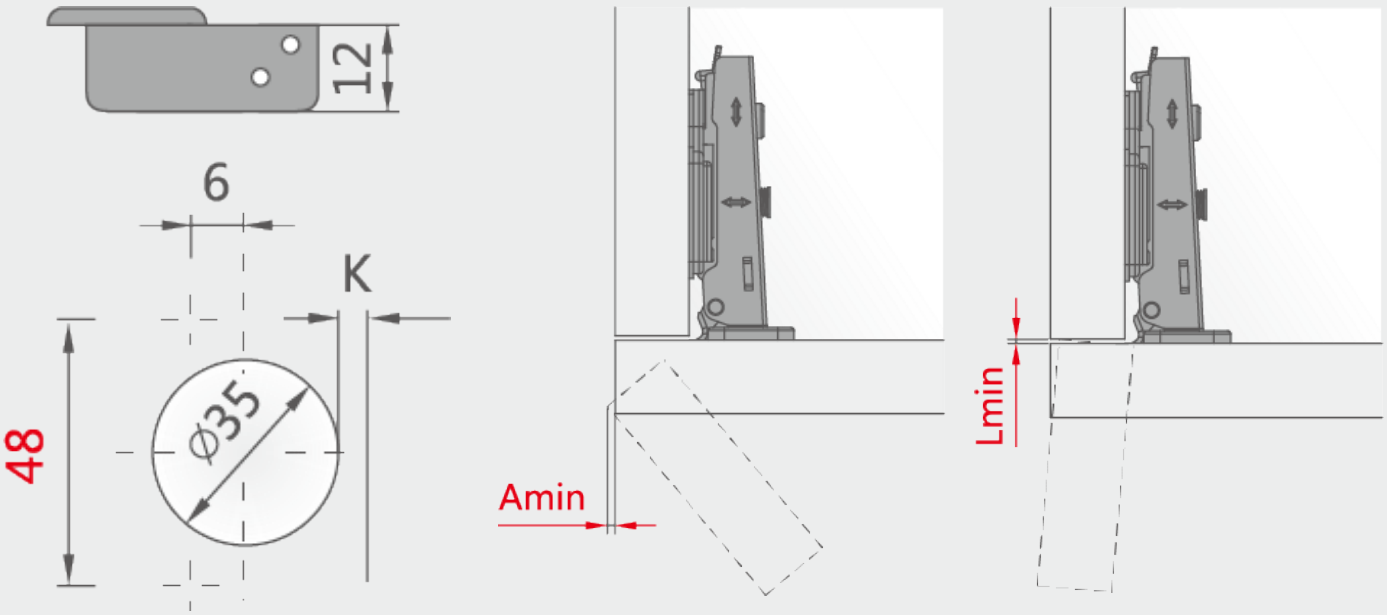

A (min) T / K	15	16	17	18	19	20	21	22
3	0.4	0.4	0.6	0.8	1.2	1.6	2.2	2.9
4	0.4	0.4	0.6	0.8	1.1	1.5	2.0	2.6
5	0.4	0.4	0.6	0.8	1.1	1.4	1.8	2.4
6	0.4	0.4	0.5	0.7	1.0	1.3	1.7	2.2
7	0.4	0.4	0.5	0.7	1.0	1.3	1.6	2.0

L (min) T / K	15	16	17	18	19	20	21	22
3	1	1	1	1	1	1	1	1
4	1	1	1	1	1	1	1.2	1.3
5	1.5	1.5	1.6	1.7	1.9	2.0	2.2	2.3
6	2.5	2.5	2.6	2.8	2.9	3.0	3.2	3.3
7	3.5	3.5	3.6	3.7	3.9	4.0	4.2	4.3

Full overlay



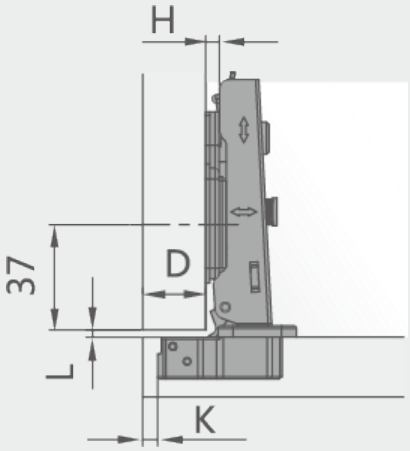

C=9 H=14+K-D

D / K \ H	0	2
3	17	15
4	18	16
5	19	17
6	20	18
7	21	19

Half overlay

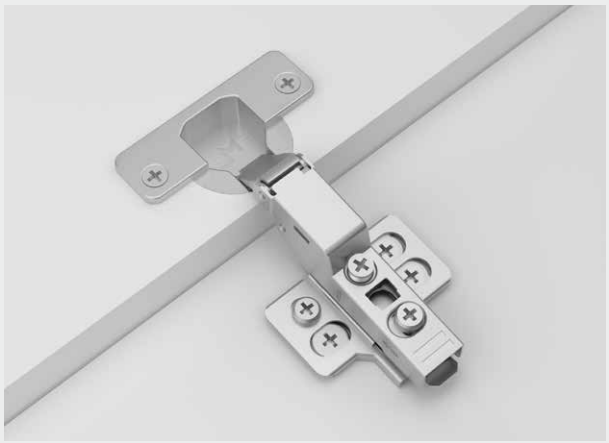

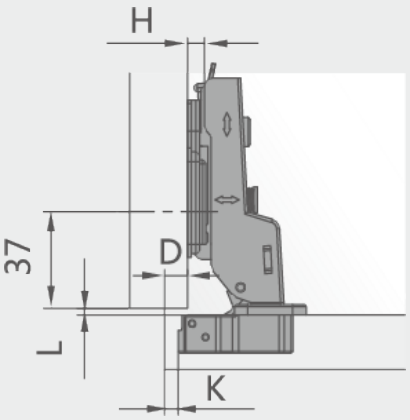

C=9 H=5+K-D

D / K \ H	0	2
3	8	6
4	9	7
5	10	8
6	11	9
7	12	10

Inset



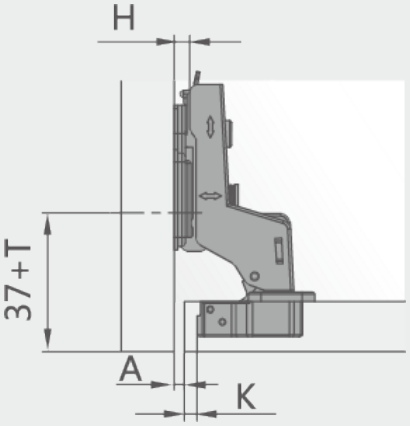

C=18 H=-4+K+A

D / K \ H	0	2
3	1	3
4	0	2
5	-1	1
6	-2	0
7	-3	-1

Packaging



Packaging

Packaging_____Page 154

Product

To provide our customers with a comprehensive range of services, we develop customized packaging solutions for our drawer slides.
Using our self-designed, modern production facilities, we ensure that your slides are not only manufactured efficiently but also securely and optimally packaged.

Packaging

Packaging services

Industrial packaging
Efficient and precise, ensuring maximum safety for your products.

Set packaging
Left and right slides packed together in one box. This saves space, optimizes logistics, and reduces shipping costs while simplifying product organization.

Strapping
Left and right slides strapped together – secure packaging with durable strapping.

Film wrapping
Protection and transparency – your slides are securely wrapped in film bags.

Packaging Optimization

Custom printing of your desired layout
For example logo, QR code or DataMatrix.

Label printing
For example serial numbers or production data.

Optimized layer configurations
- Best possible use of space
- Efficient and space-saving packaging solution
- Optimized transport and costs

Individualization

Another aspect of automation is packaging optimization, which allows customized adjustments to be seamlessly integrated into the packaging process. This includes custom printing of your desired layout with customer-specific elements such as logos, barcodes, QR codes, or DataMatrix to enhance brand identity and simplify logistics processes.
Additionally, we offer flexible label printing, enabling you to add specific information to your products, such as serial numbers, production data or other variable details. This ensures your packaging consistently meets current requirements and remains easy to track.
For products of varying lengths, we also provide optimized layer configurations, ensuring the best possible use of space during the packaging process. This facilitates an efficient and space-saving packaging solution that optimizes transport and reduces costs.
Our tailored solutions guarantee optimal protection for your products while meeting the demands of the modern market. Trust our expertise to deliver your packaging requirements at the highest standard.

Set packaging



Industrial packaging

White boxes for left-hand slides.



Brown boxes for roght-hand slides.



REME Möbelbeschläge GmbH
Industriestraße 48
D-33161 Hövelhof

+49 (0) 5257-9492920
www.reme-gmbh.de
info@reme-gmbh.de
instagram.com/reme.gmbh
facebook.com/reme.gmbh